Brilliant
THE JEWEL IN LIGHTING

Tanko WA BEW
96162...
96164...

08.16

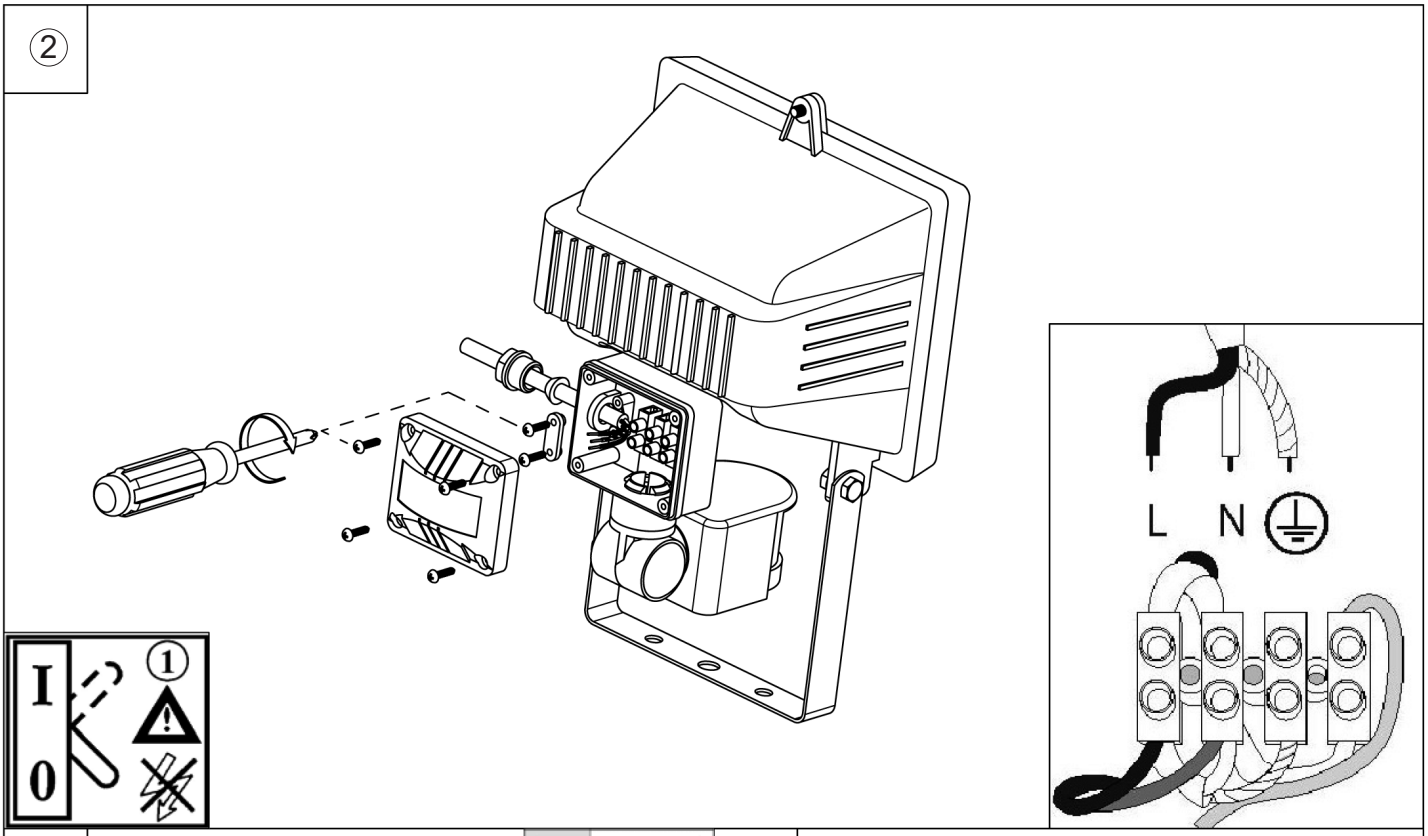

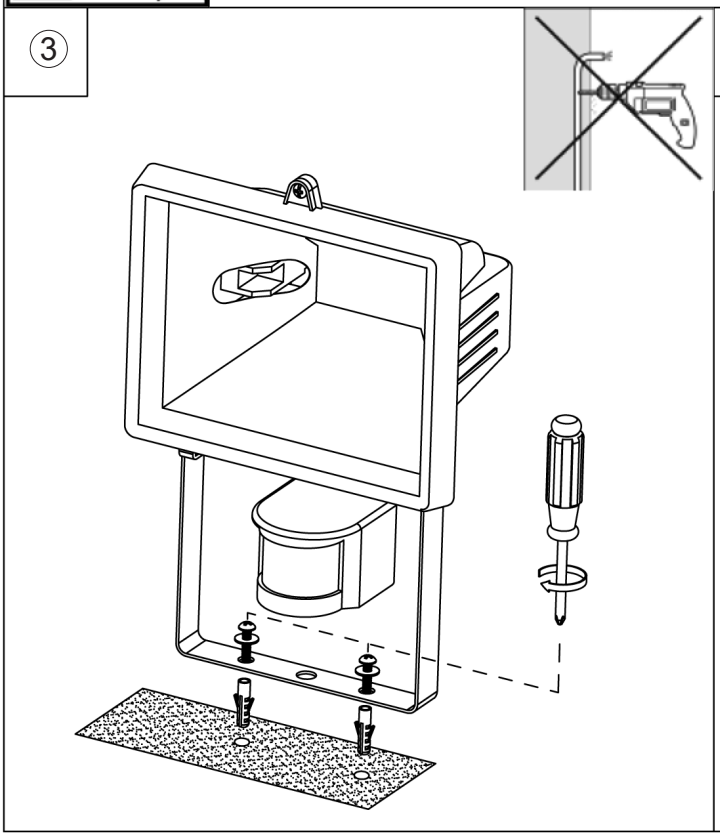

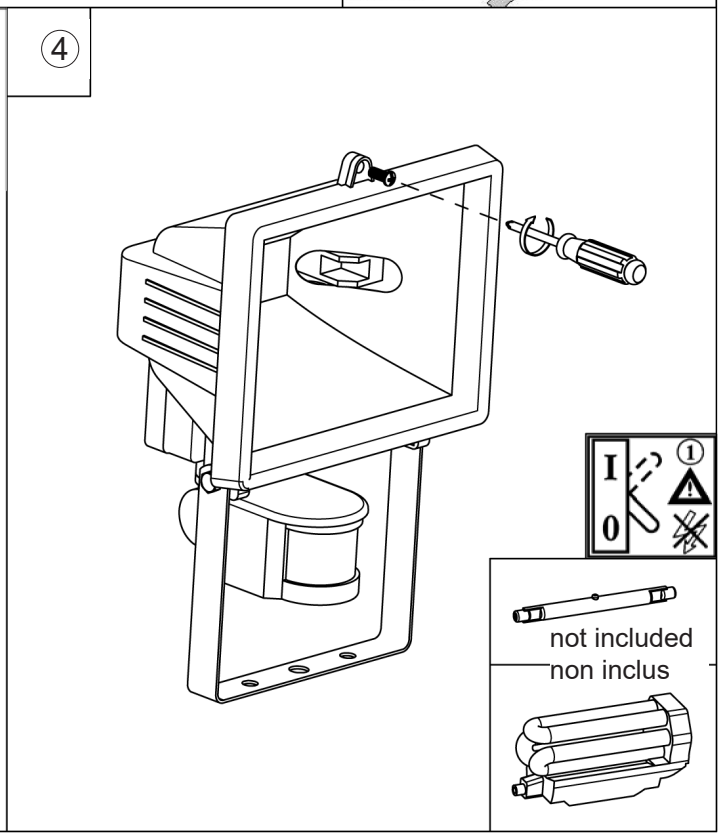

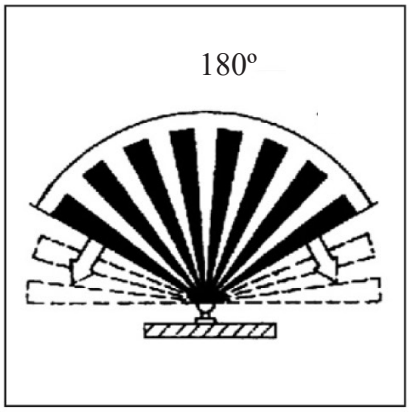
180º

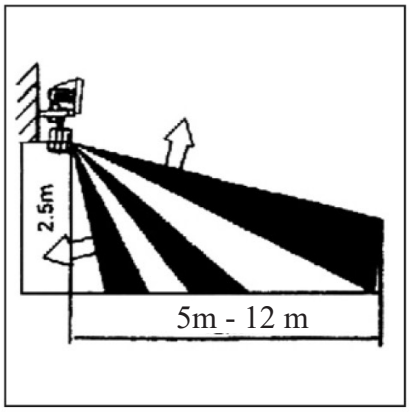
2.5m
5m - 12 m

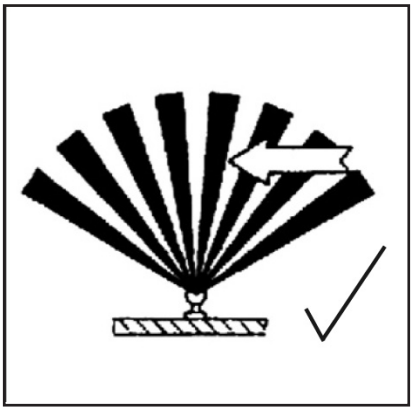

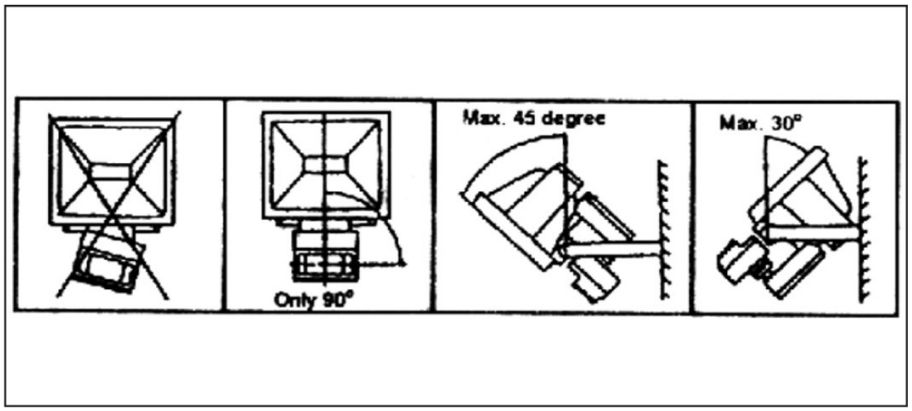
Only 90°
Max. 45 degree
Max. 30°

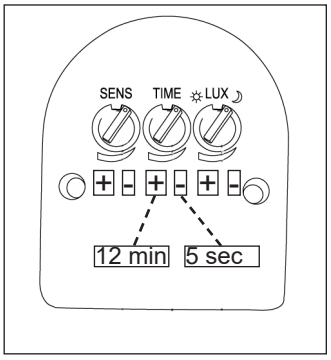
SENS
TIME
LUX
12 min
5 sec