Brilliant
THE JEWEL IN LIGHTING

Tanko WA
96163...

08.16

②

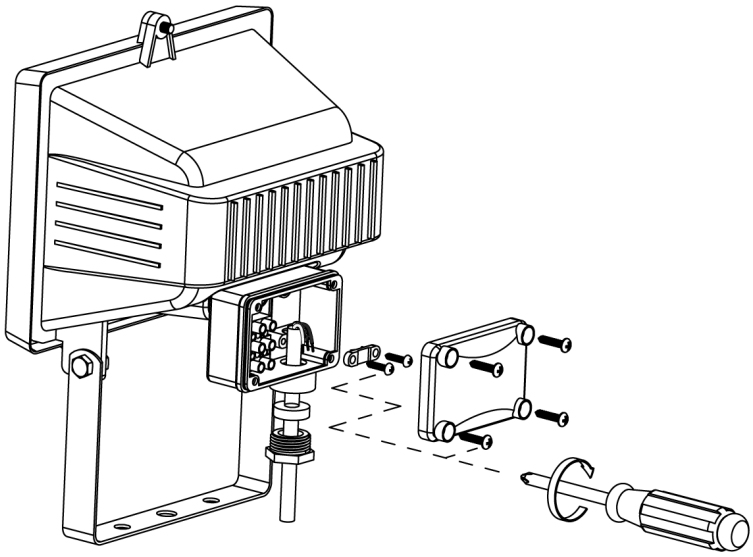

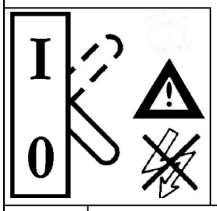

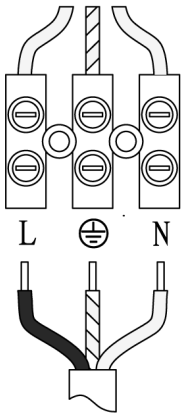

③

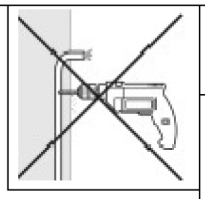

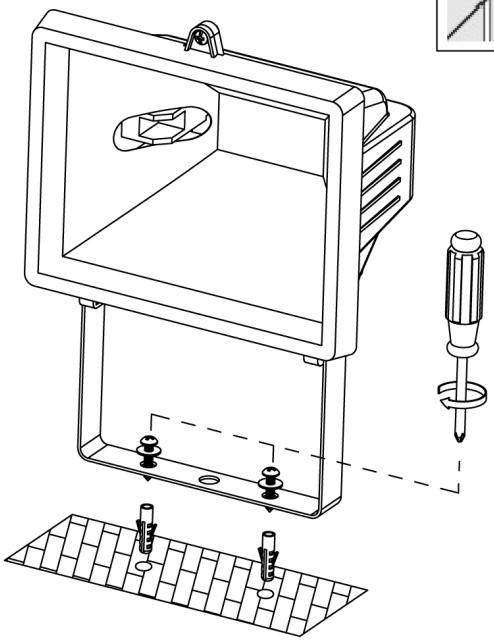

④

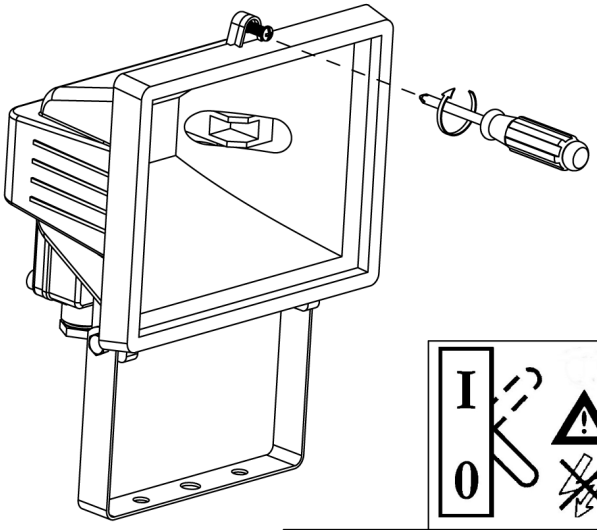

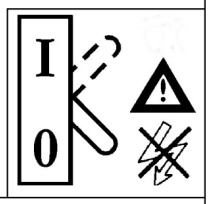

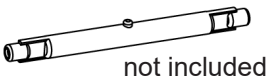

not included
non inclus