INSTRUCTION SHEET

Brilliant

CROSSTOWN
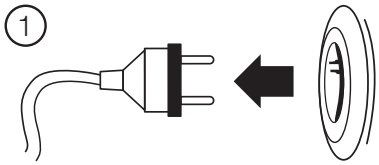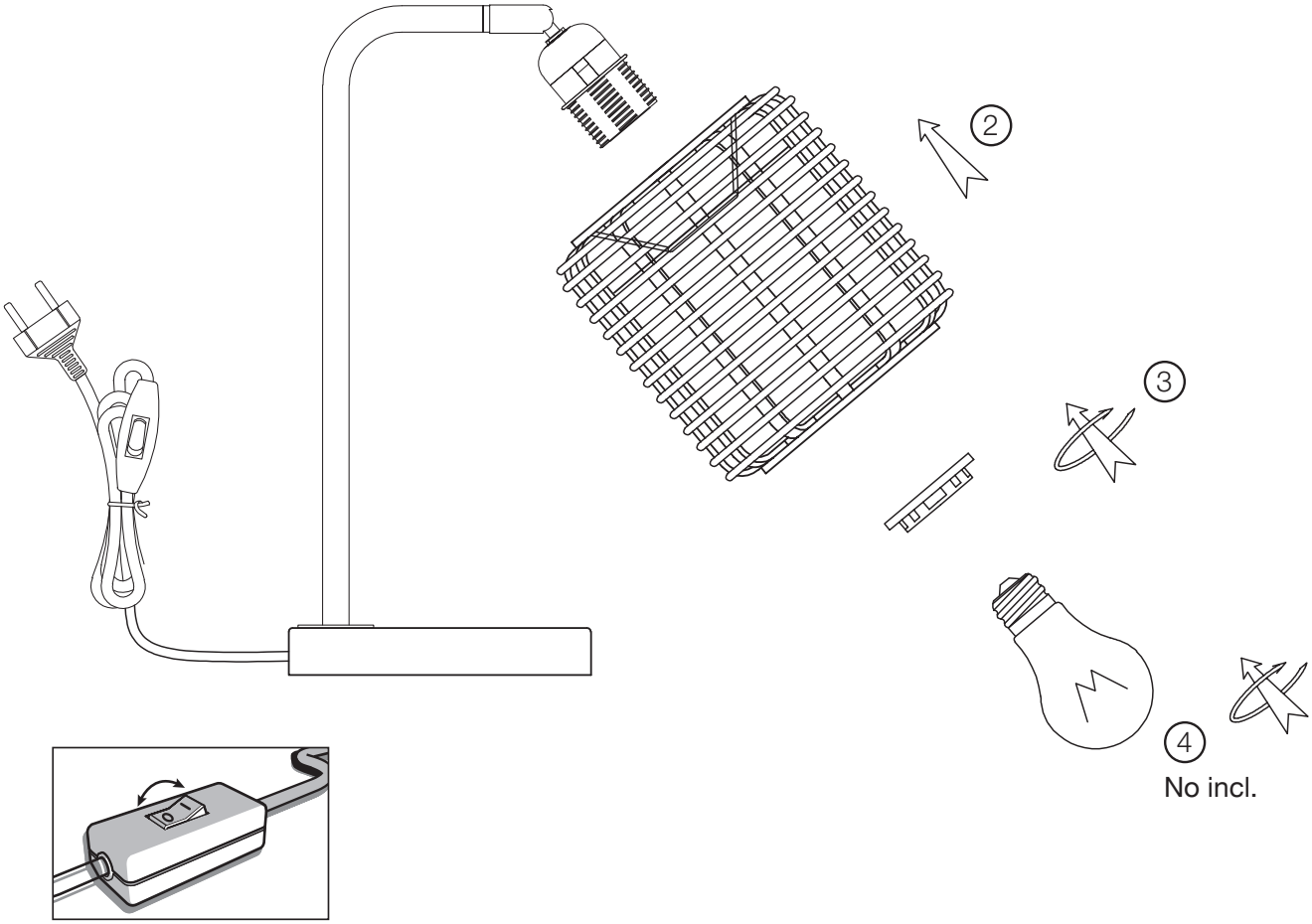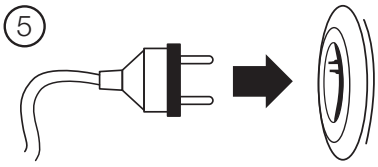
93057...