Brilliant

ROLET
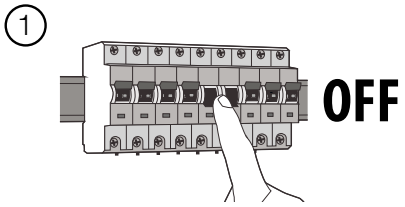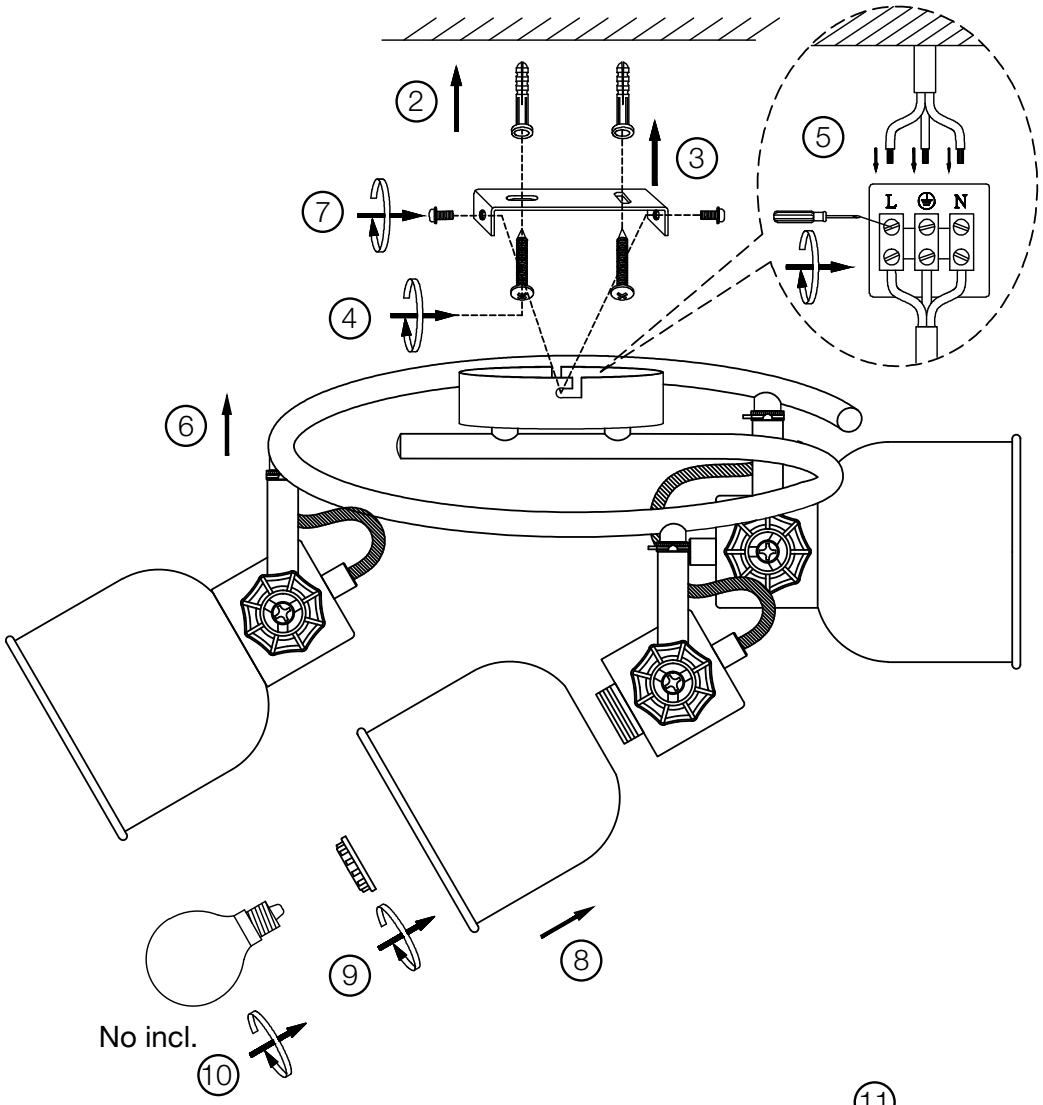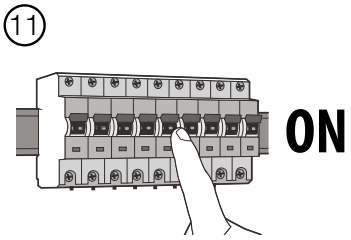
49633...