Brilliant
THE JEWEL IN LIGHTING

Bogart
76311...
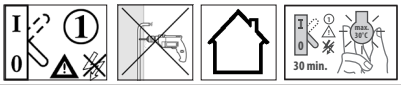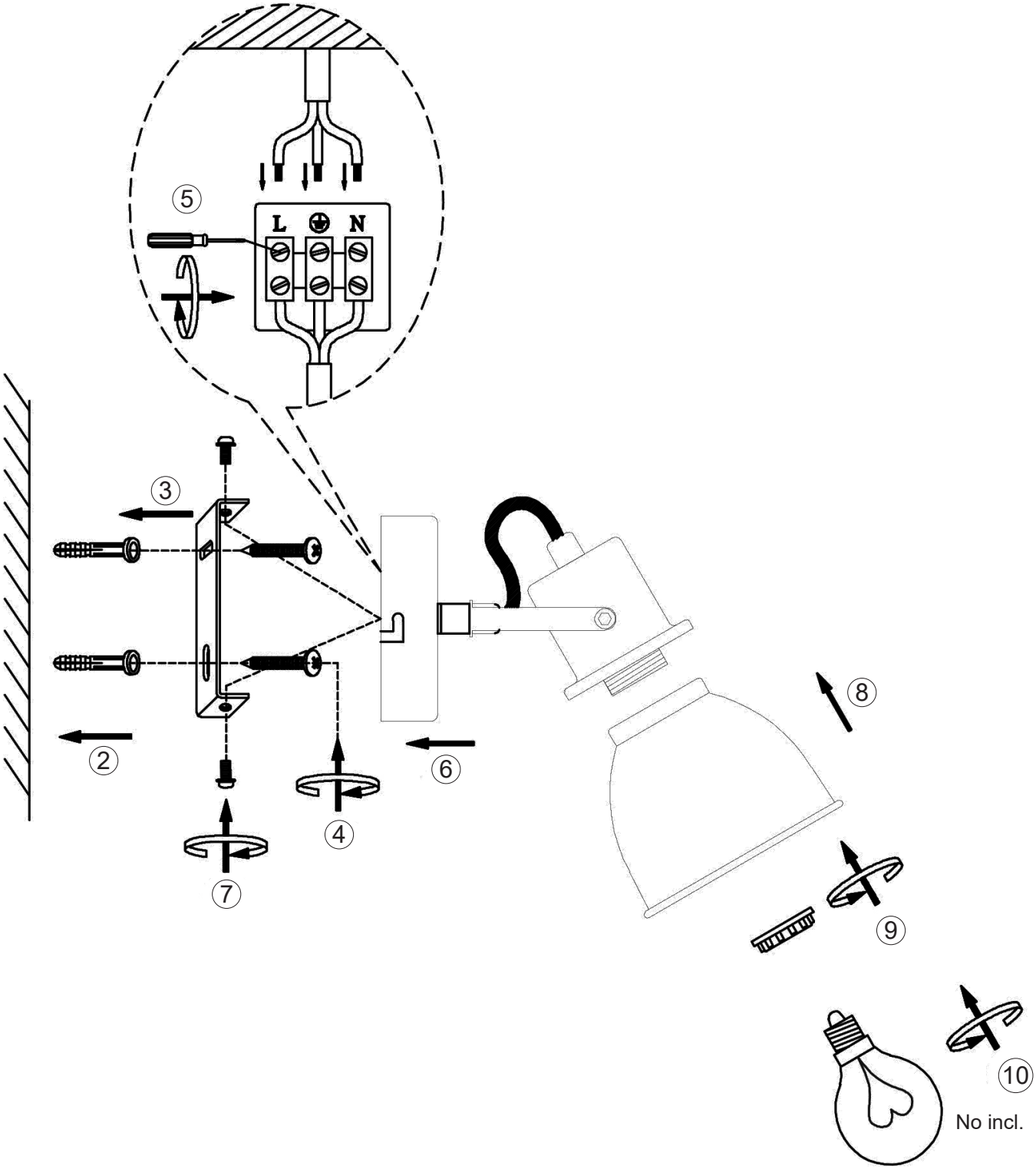
05.18