orion
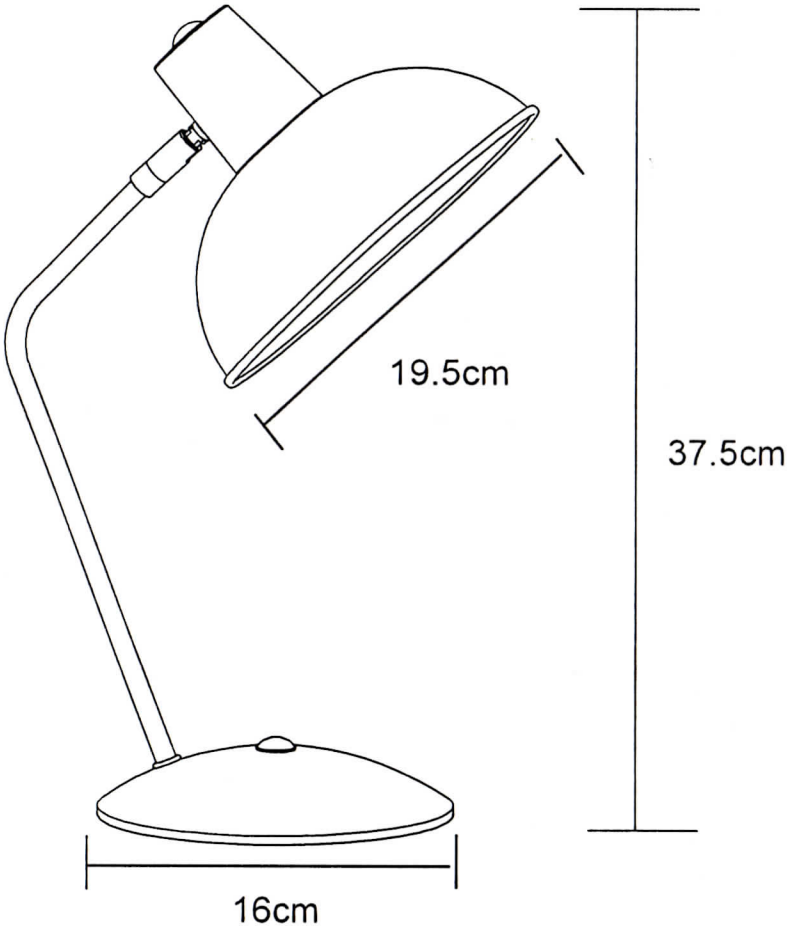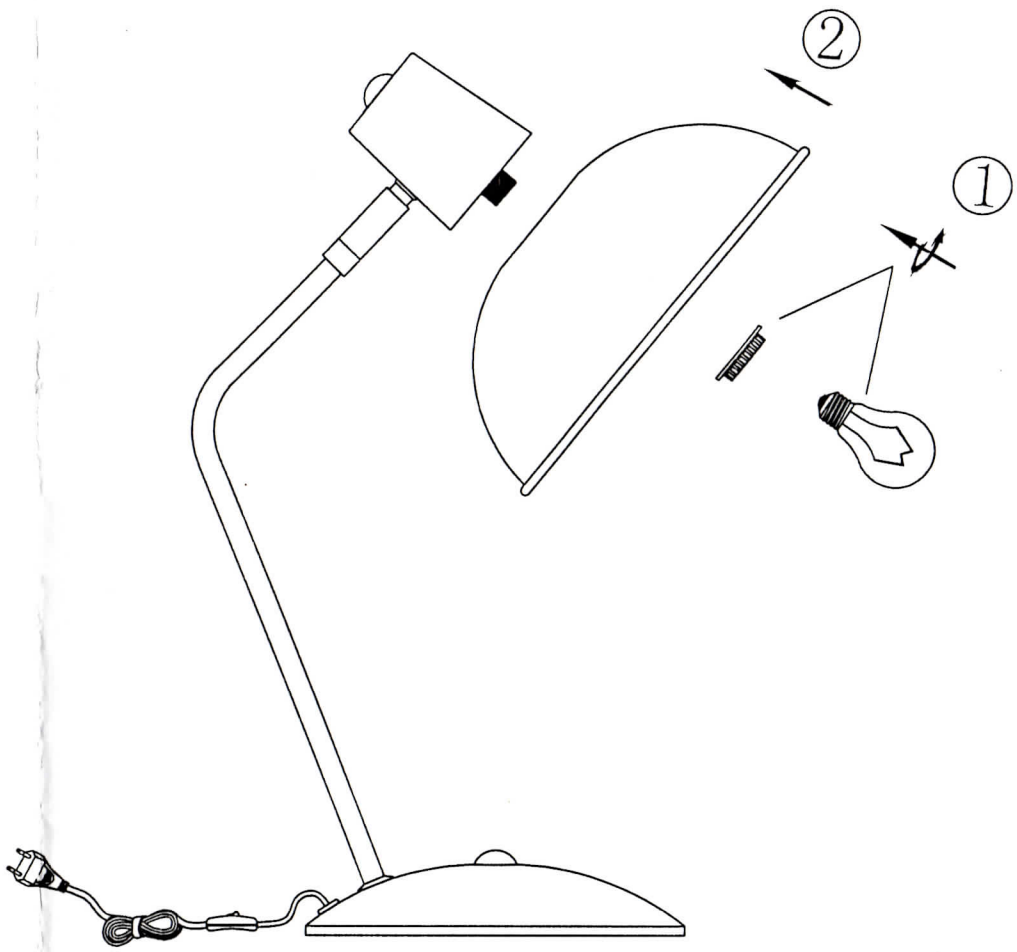
Installation / Montageanweisungen LA 4-1190