Brilliant
THE JEWEL IN LIGHTING

Ailey
92660...
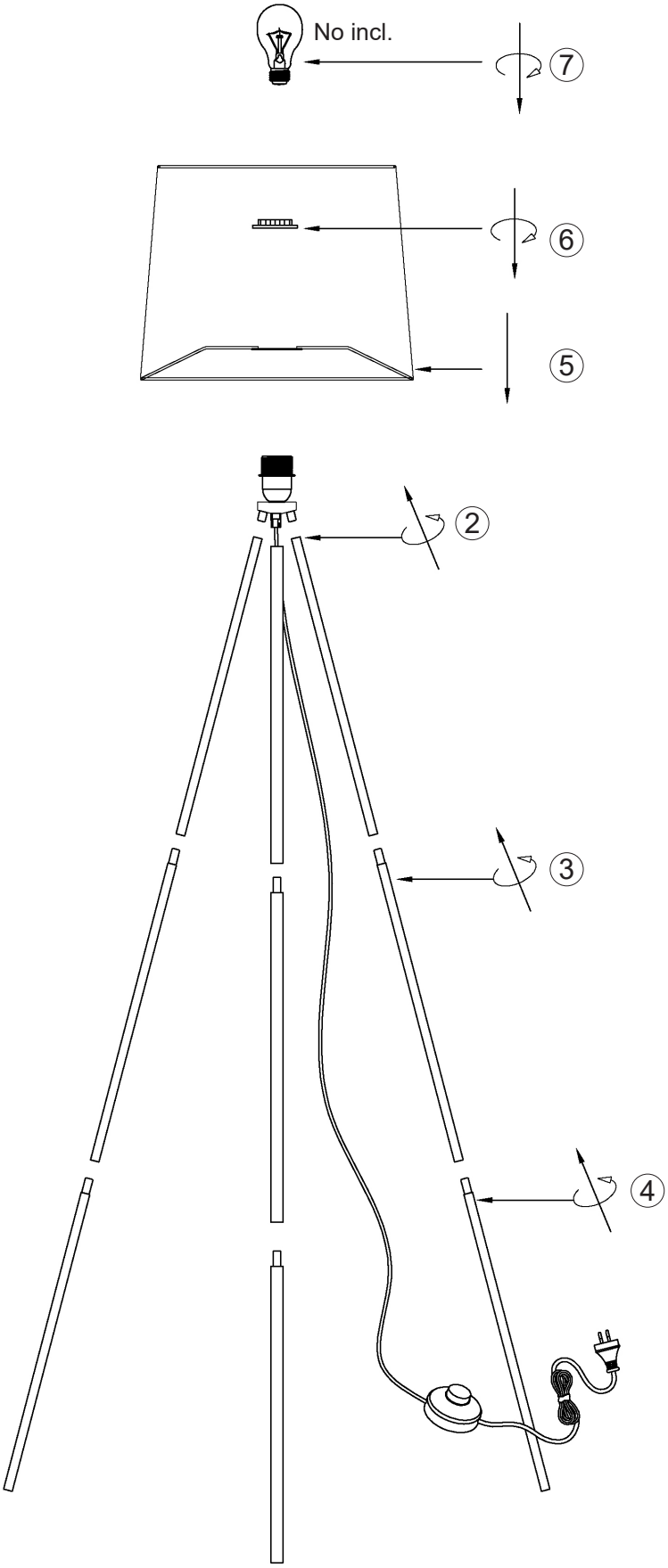
05.19