Brilliant
THE JEWEL IN LIGHTING

Lauren
94480...
94481...
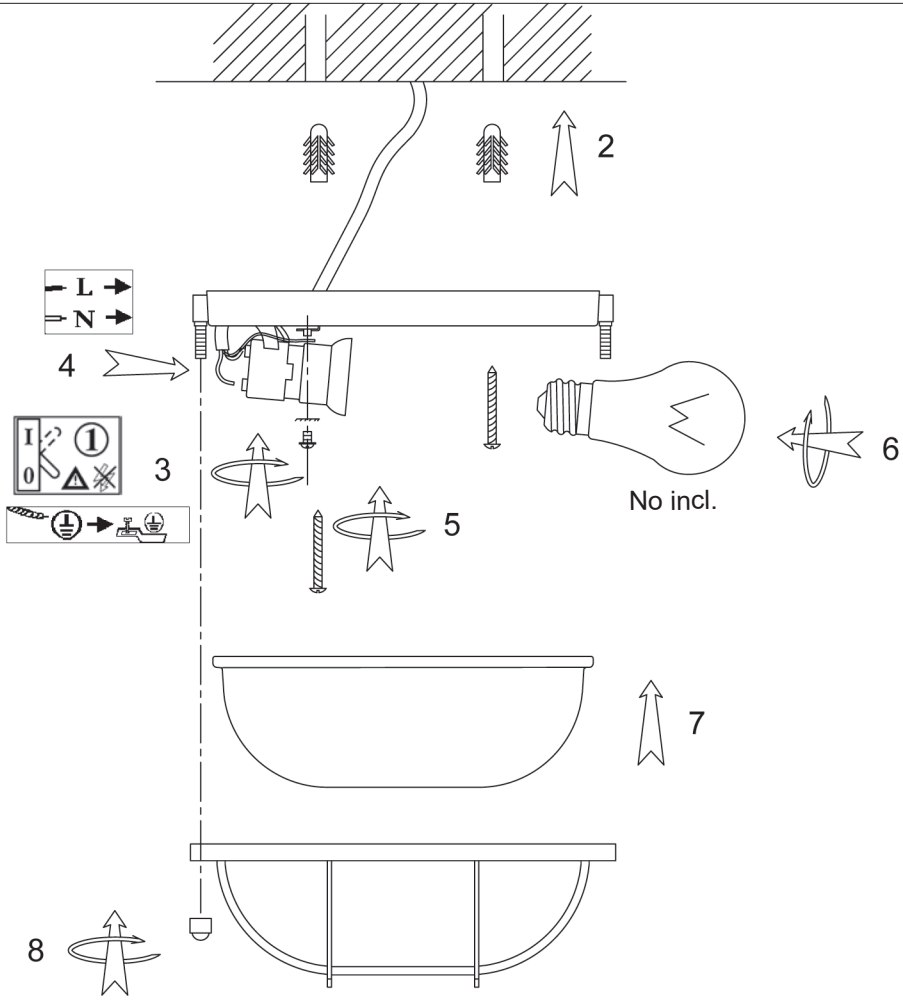
01.18