Brilliant
THE JEWEL IN LIGHTING

Boston STA
12858...
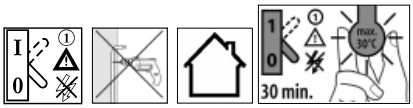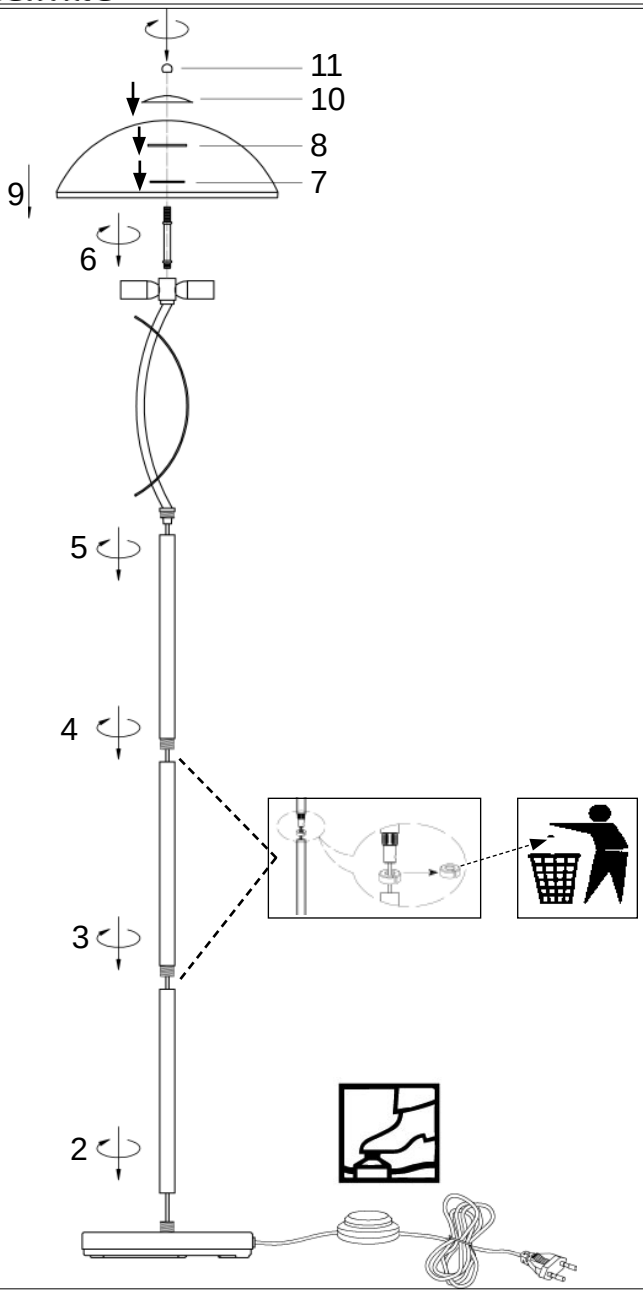
04.13