Brilliant
THE JEWEL IN LIGHTING

Gabon

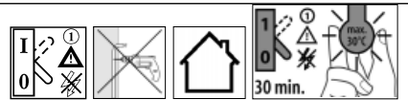
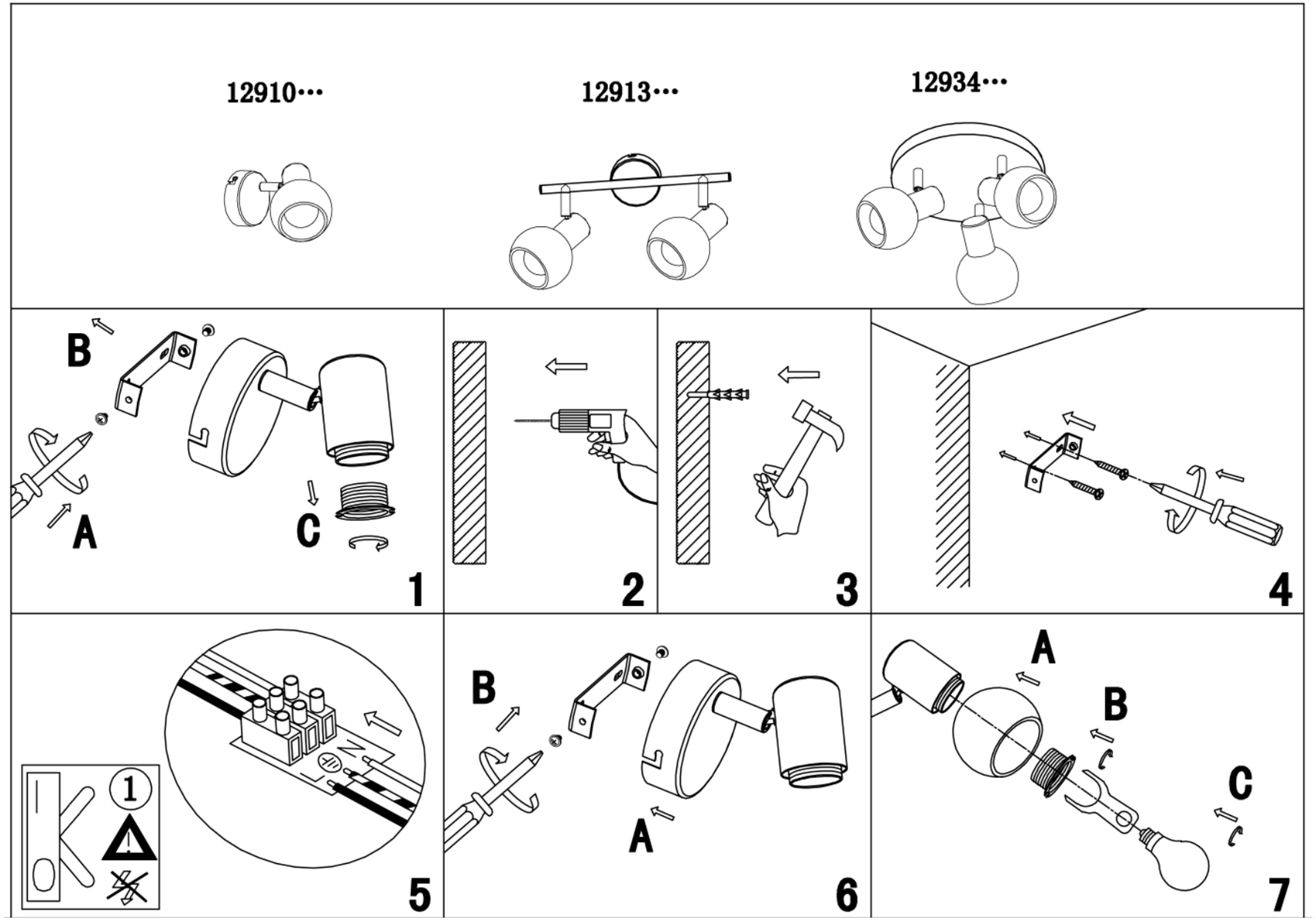
05.13