Brilliant
THE JEWEL IN LIGHTING

Nature

02.18

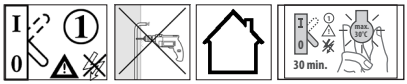

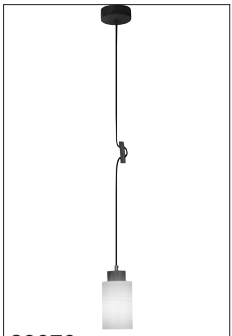

23070...

23073...

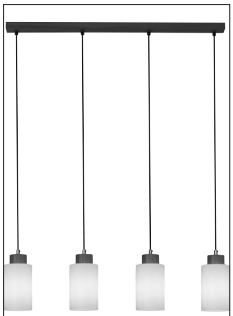
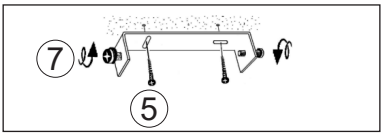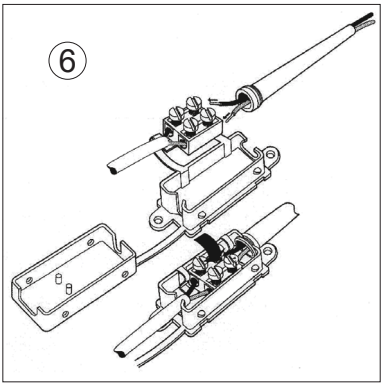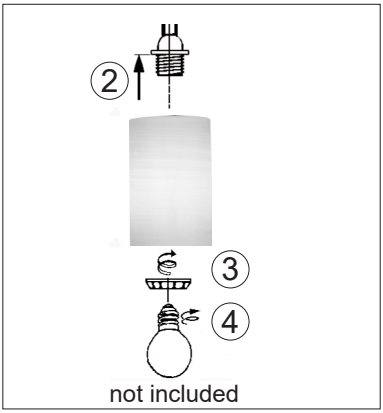
23074...