Brilliant
THE JEWEL IN LIGHTING

Aztekas
24910...
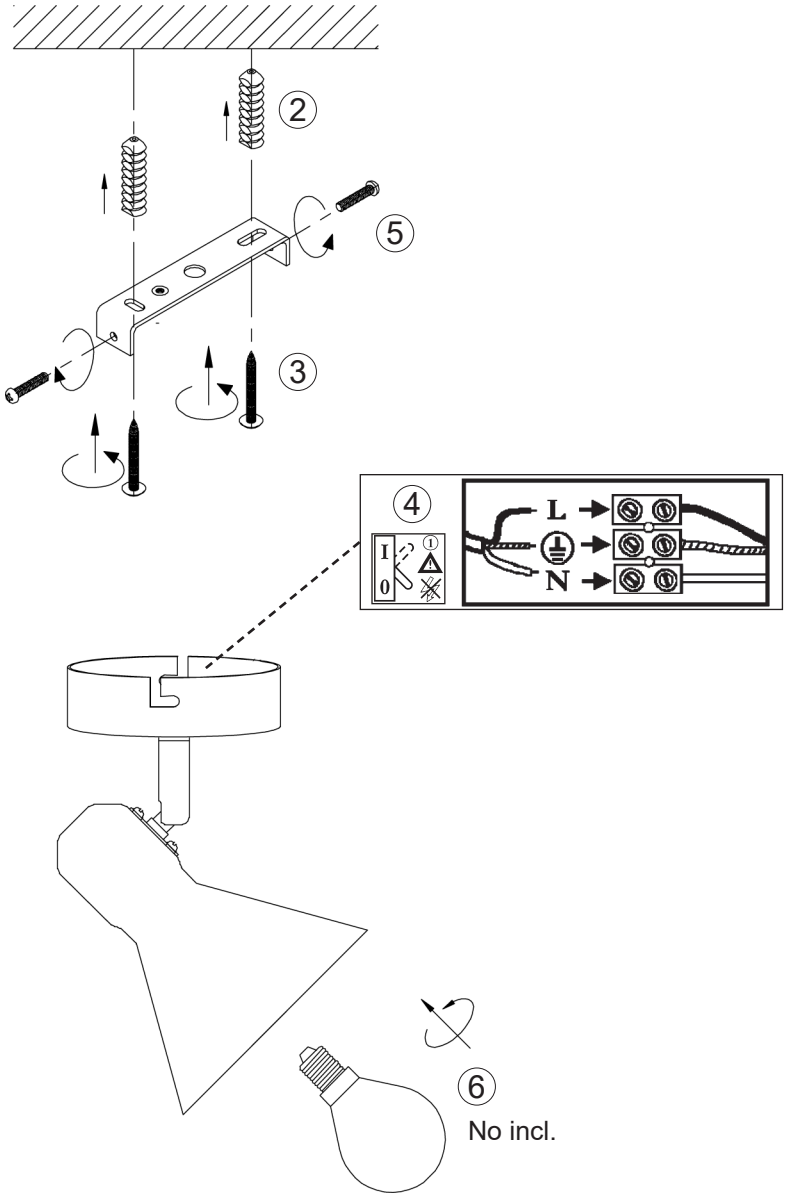
01.18