Brilliant
THE JEWEL IN LIGHTING

Newport
44281...
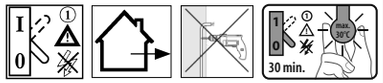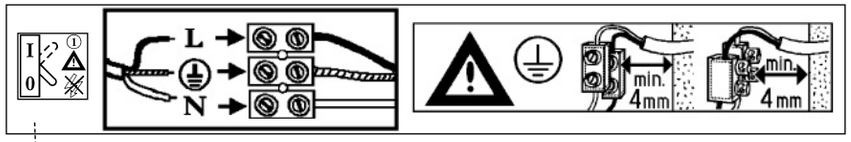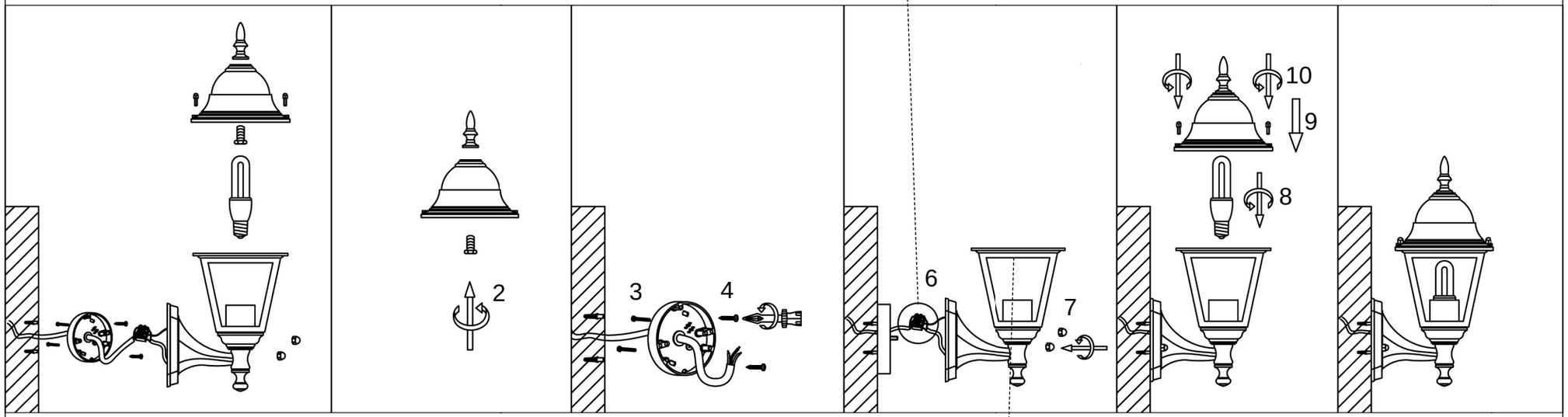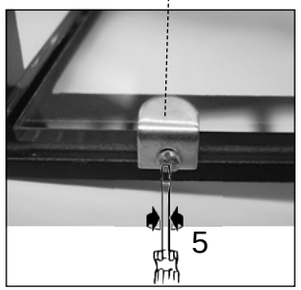
04.10