Brilliant
THE JEWEL IN LIGHTING

Newport
44282...
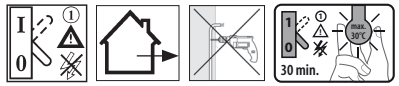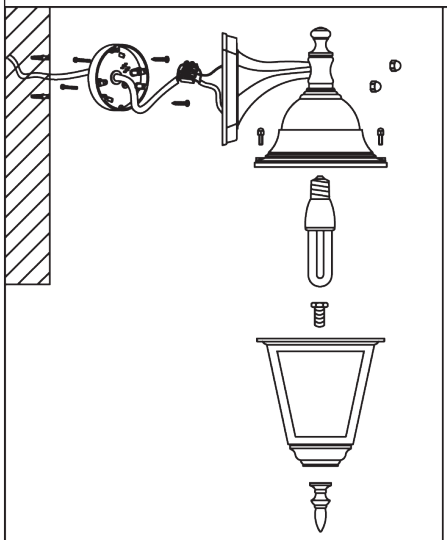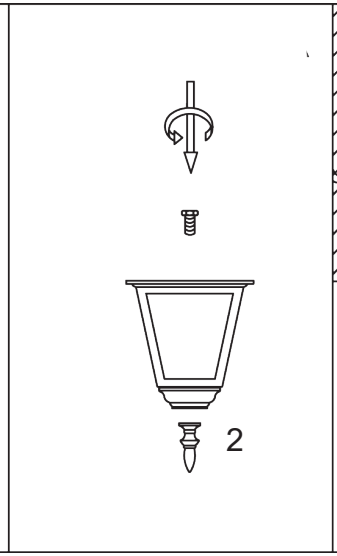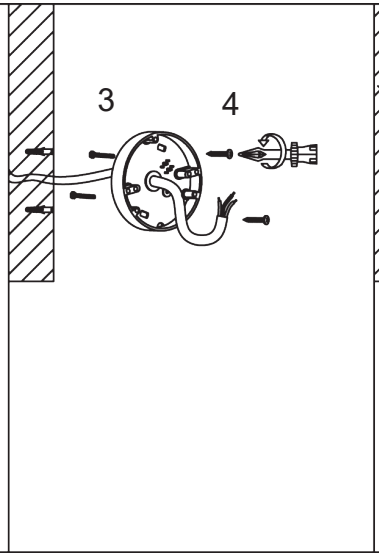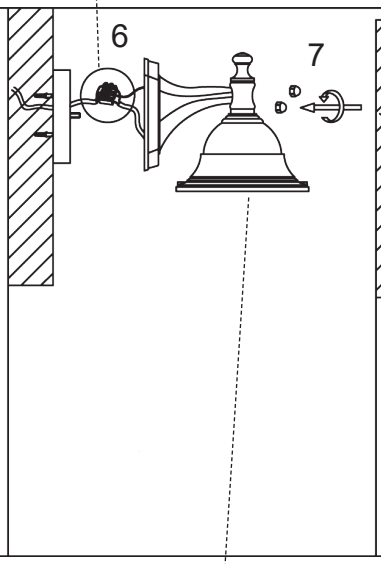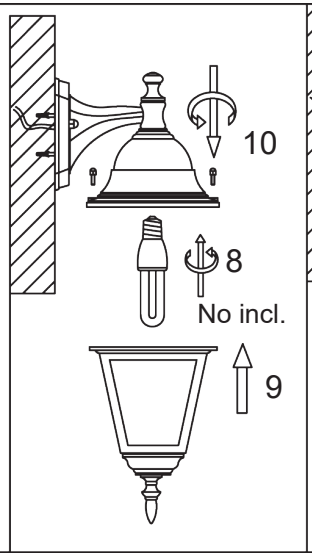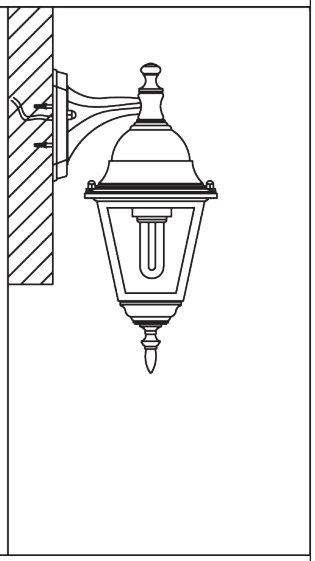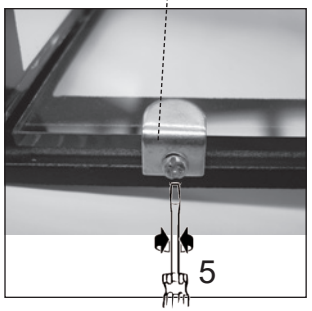
12.17