Brilliant
THE JEWEL IN LIGHTING

Gaia
44480...

12.15

1

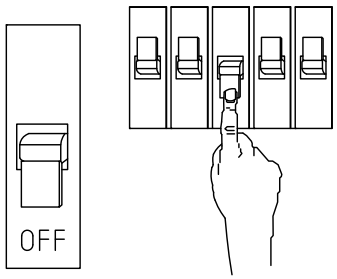

2

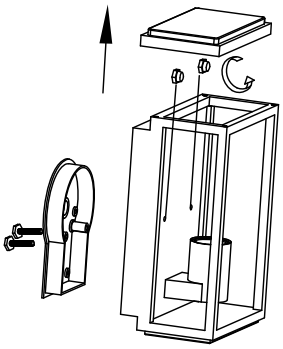

3

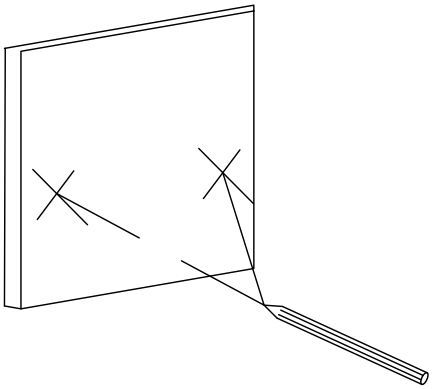

4

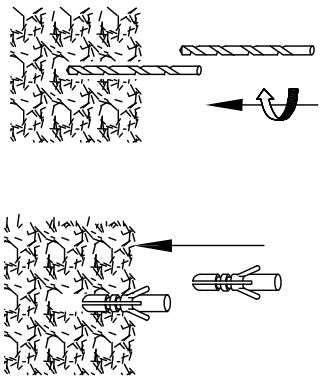

5

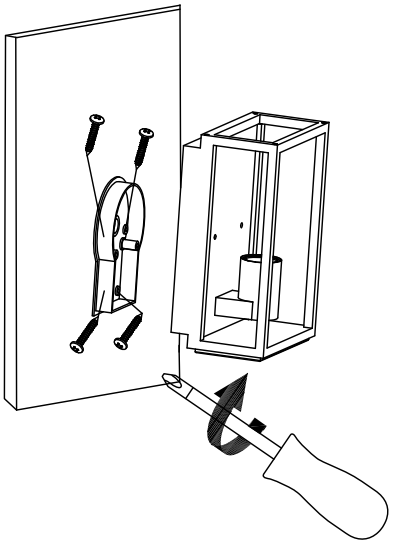

6

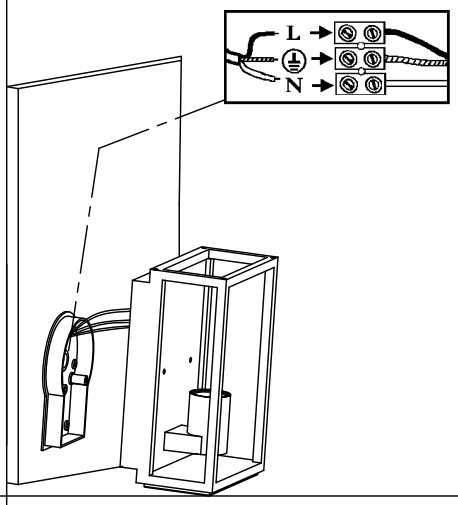

7

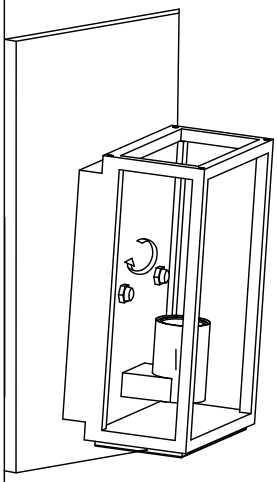

8

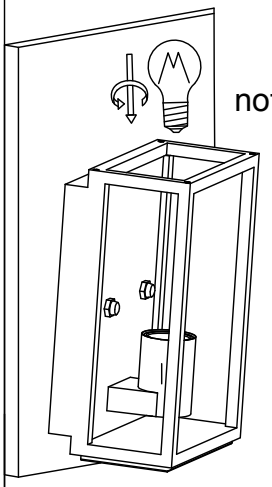

not included
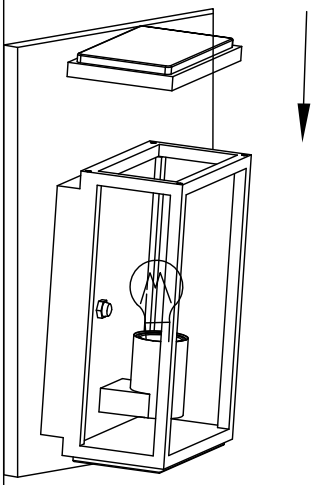
9