Brilliant
THE JEWEL IN LIGHTING

02.08

Terrence

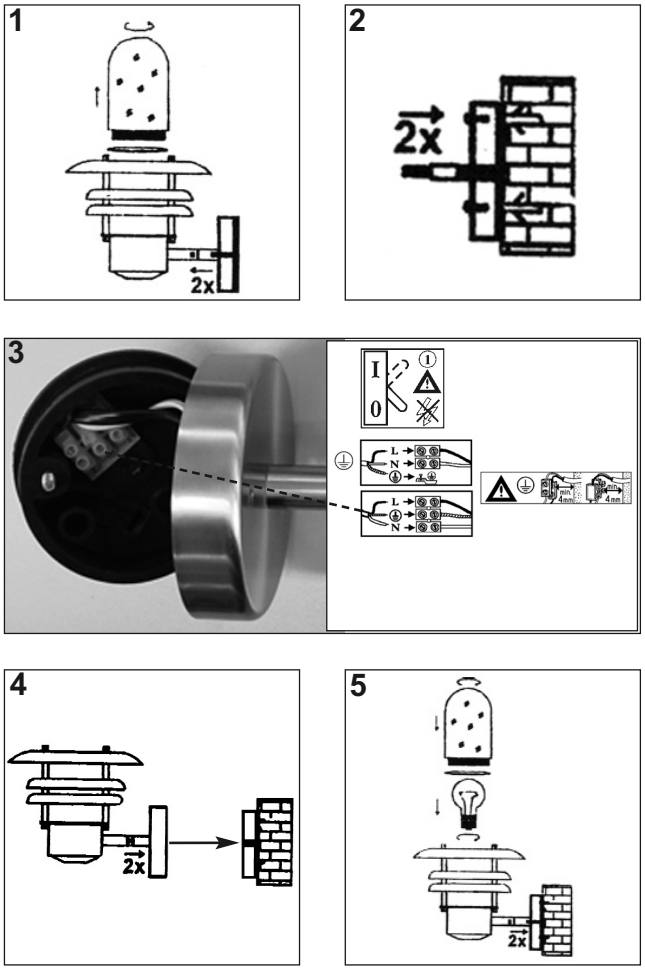

Brilliant
THE JEWEL IN LIGHTING

02.08
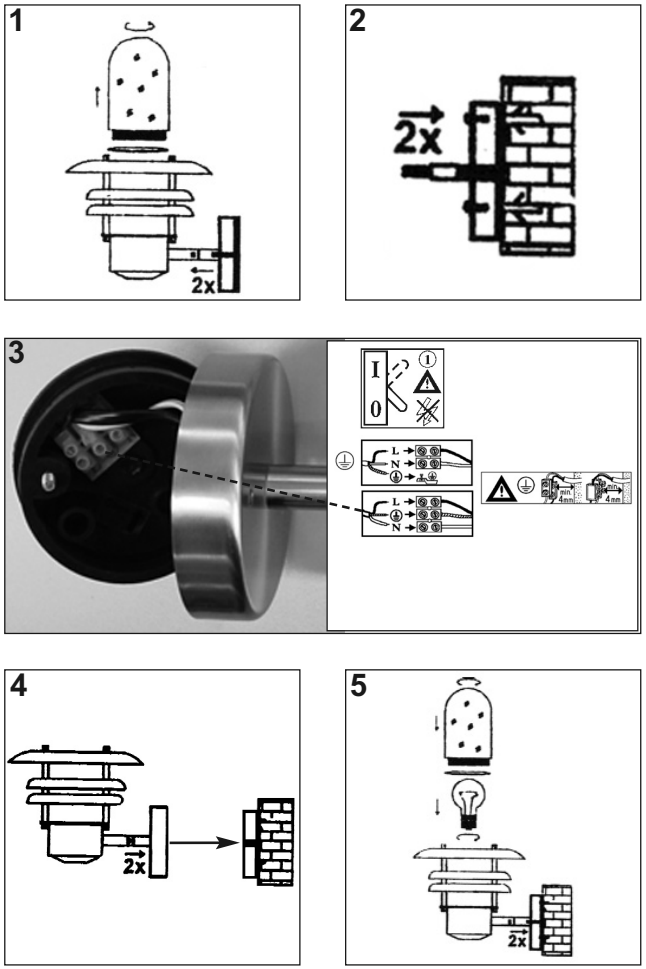
Terrence