Brilliant
THE JEWEL IN LIGHTING

Terrence

01.08

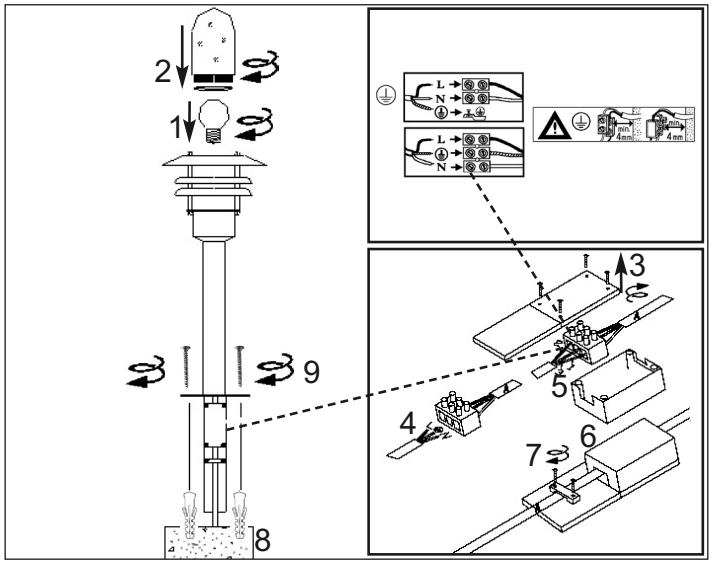

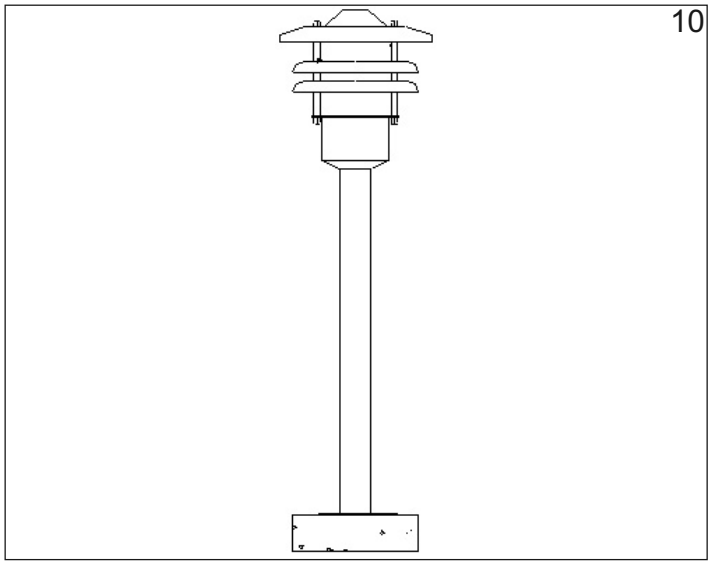

Brilliant
THE JEWEL IN LIGHTING

Terrence
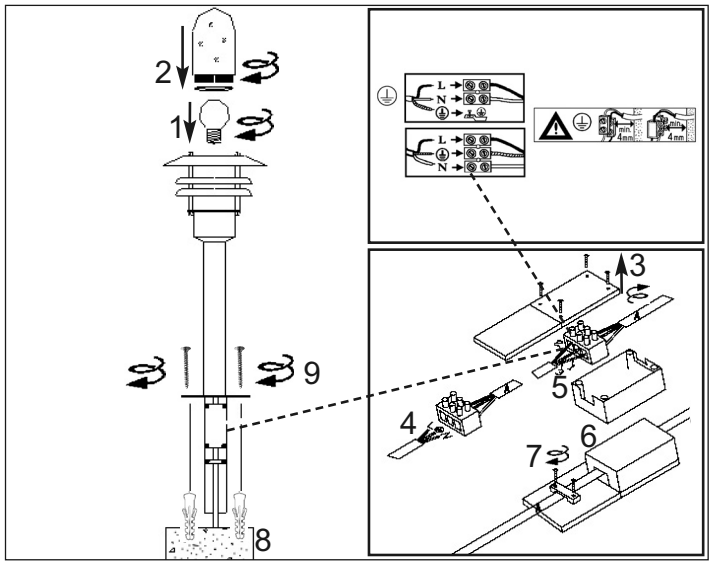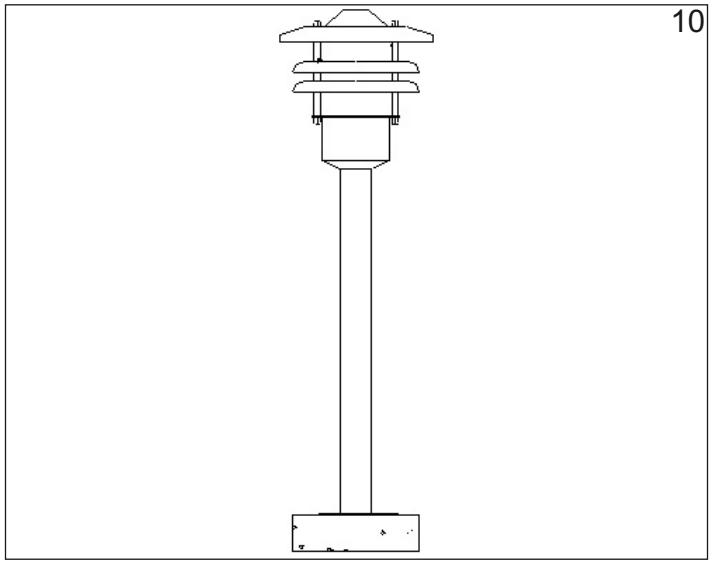
01.08