Brilliant
THE JEWEL IN LIGHTING

Oskar
46884...
46885...

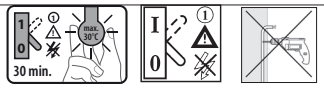
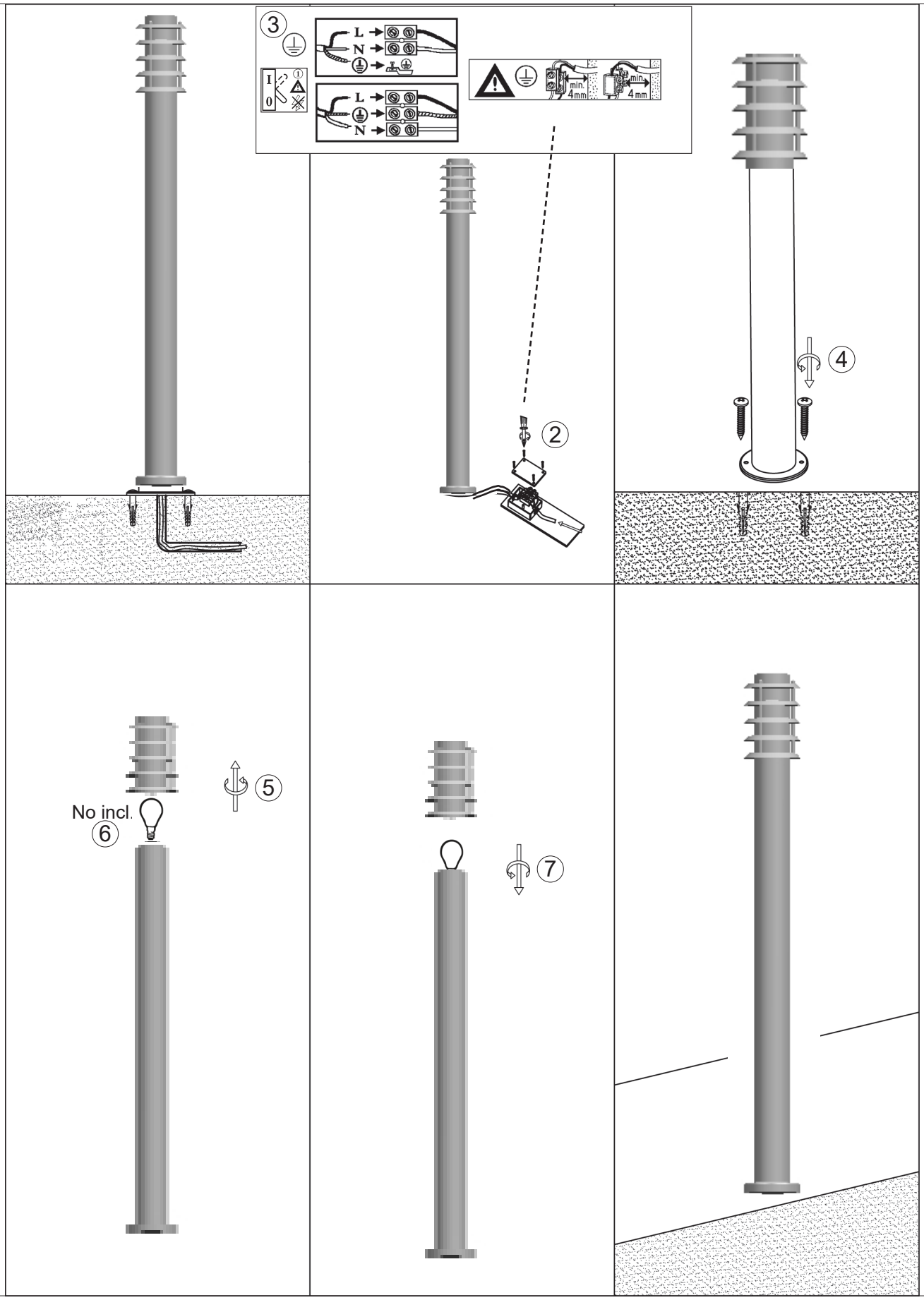
10.18