Brilliant
THE JEWEL IN LIGHTING

Artu
46987...

12.17

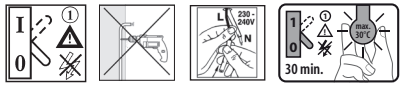

1

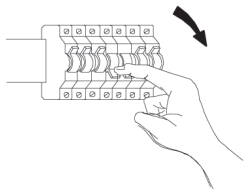

2

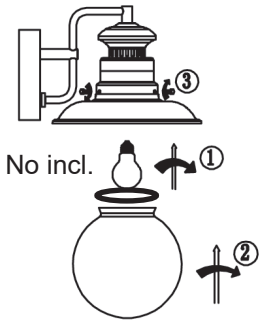

3

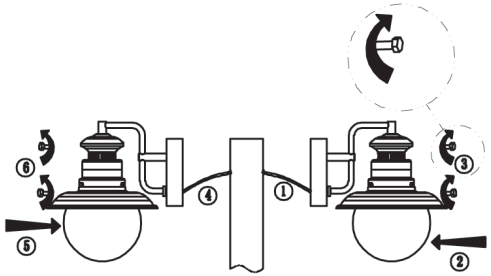

4

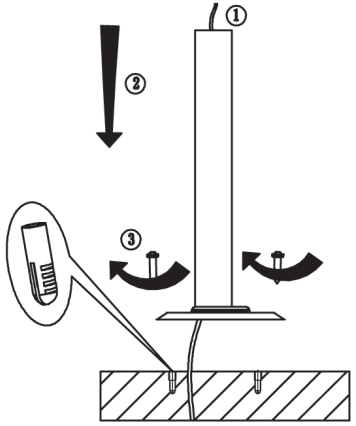

5

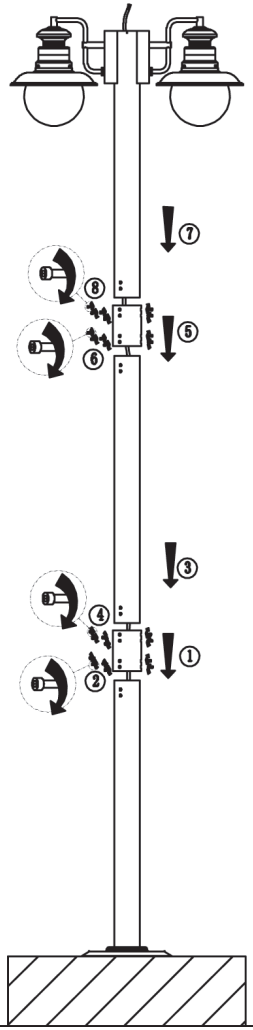

6

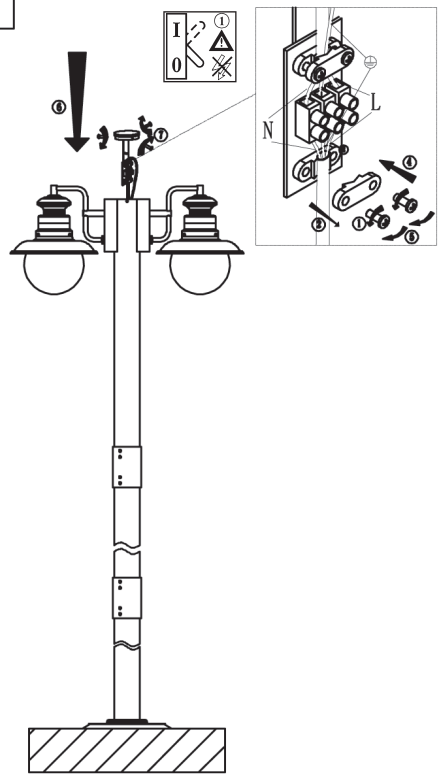
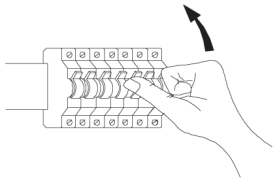
7