Brilliant
THE JEWEL IN LIGHTING

Noris PE

54170...
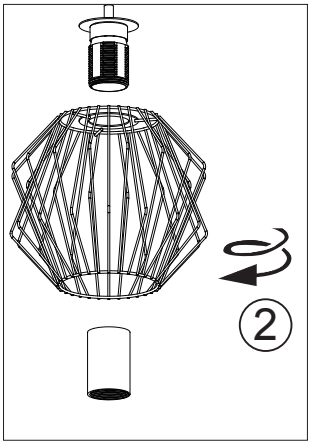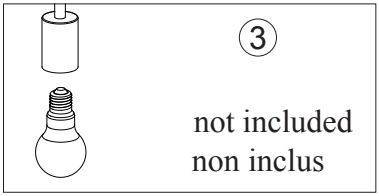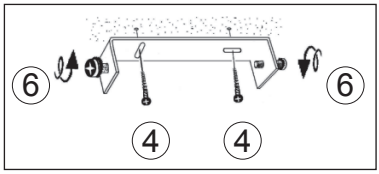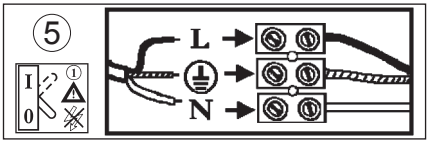
06.17