Brilliant
THE JEWEL IN LIGHTING

Todd
47698...
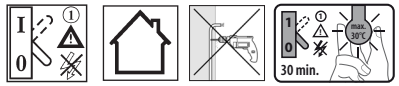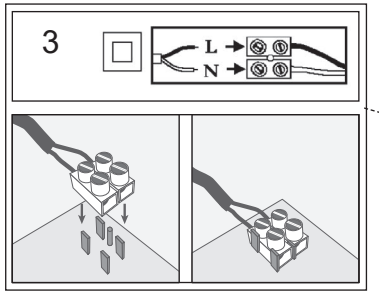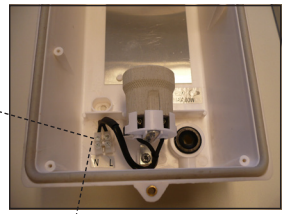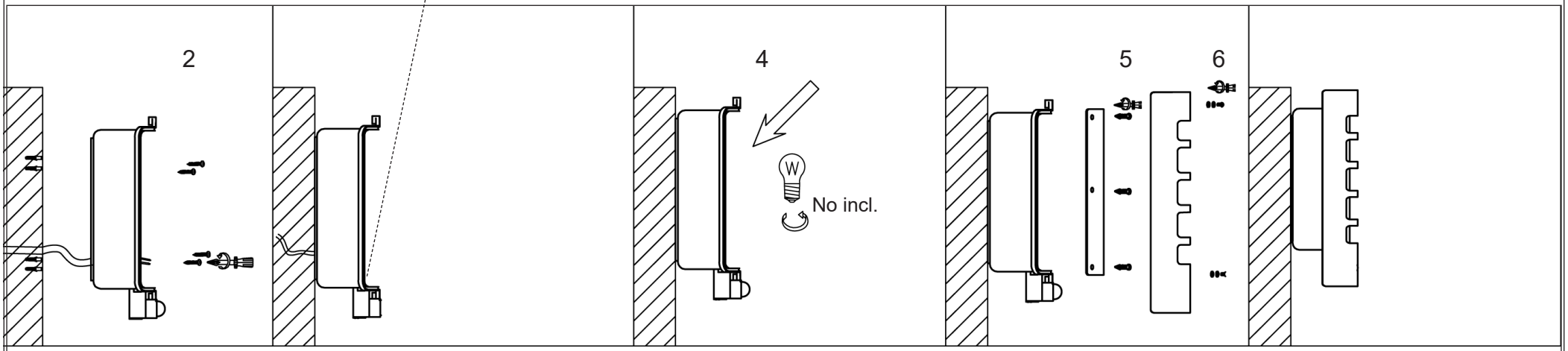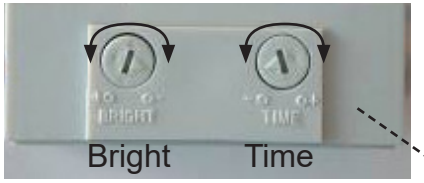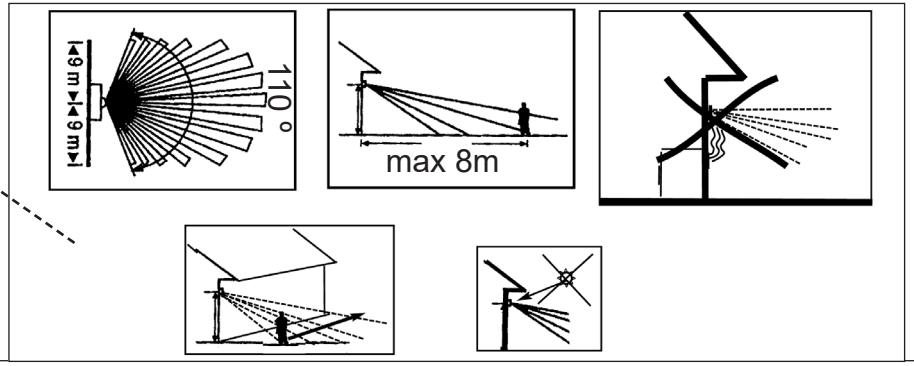
12.17