Brilliant
THE JEWEL IN LIGHTING

Istria
48682...
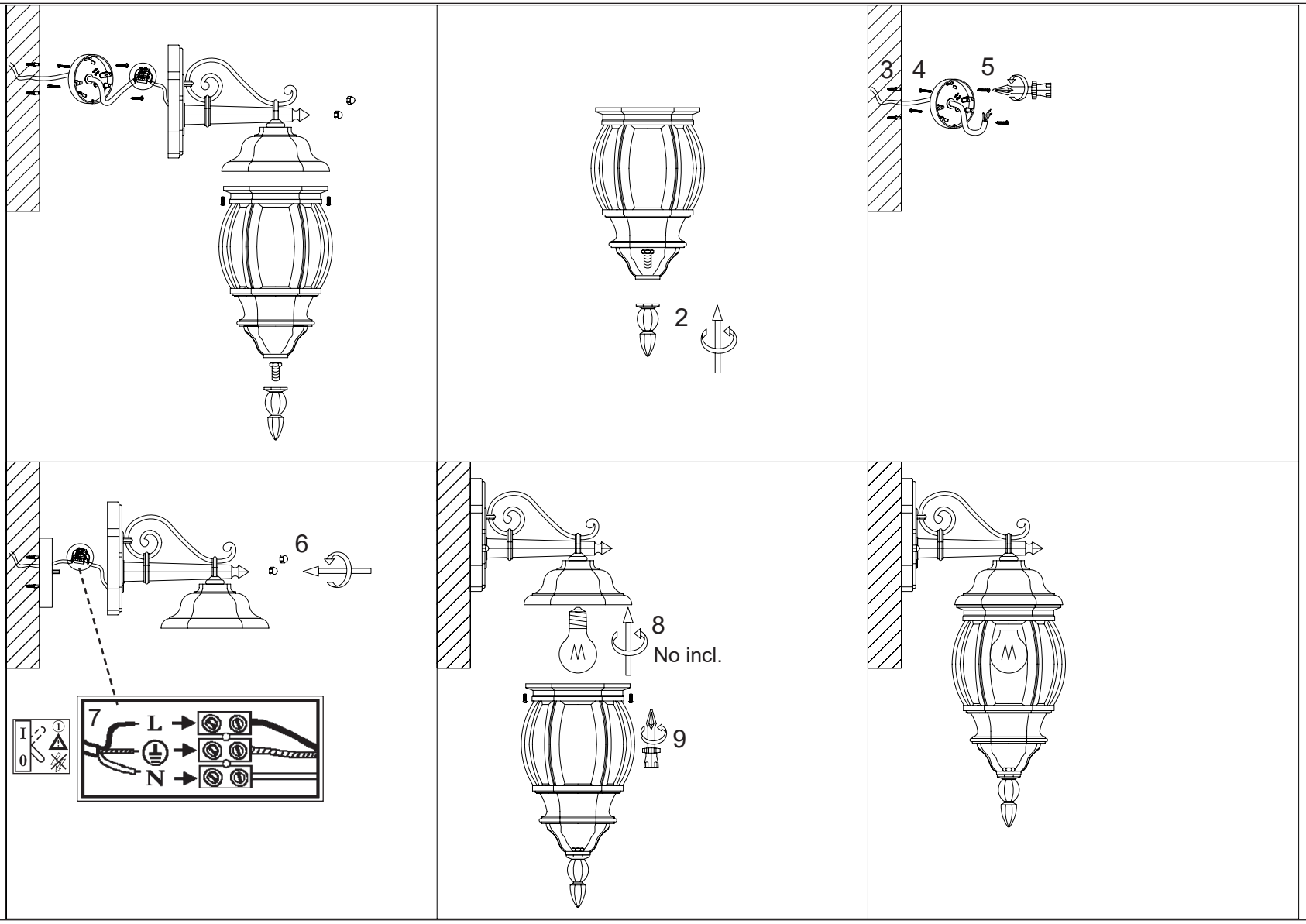
12.17