Brilliant
THE JEWEL IN LIGHTING

Istria
48697...
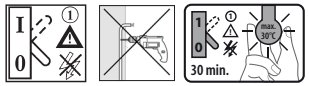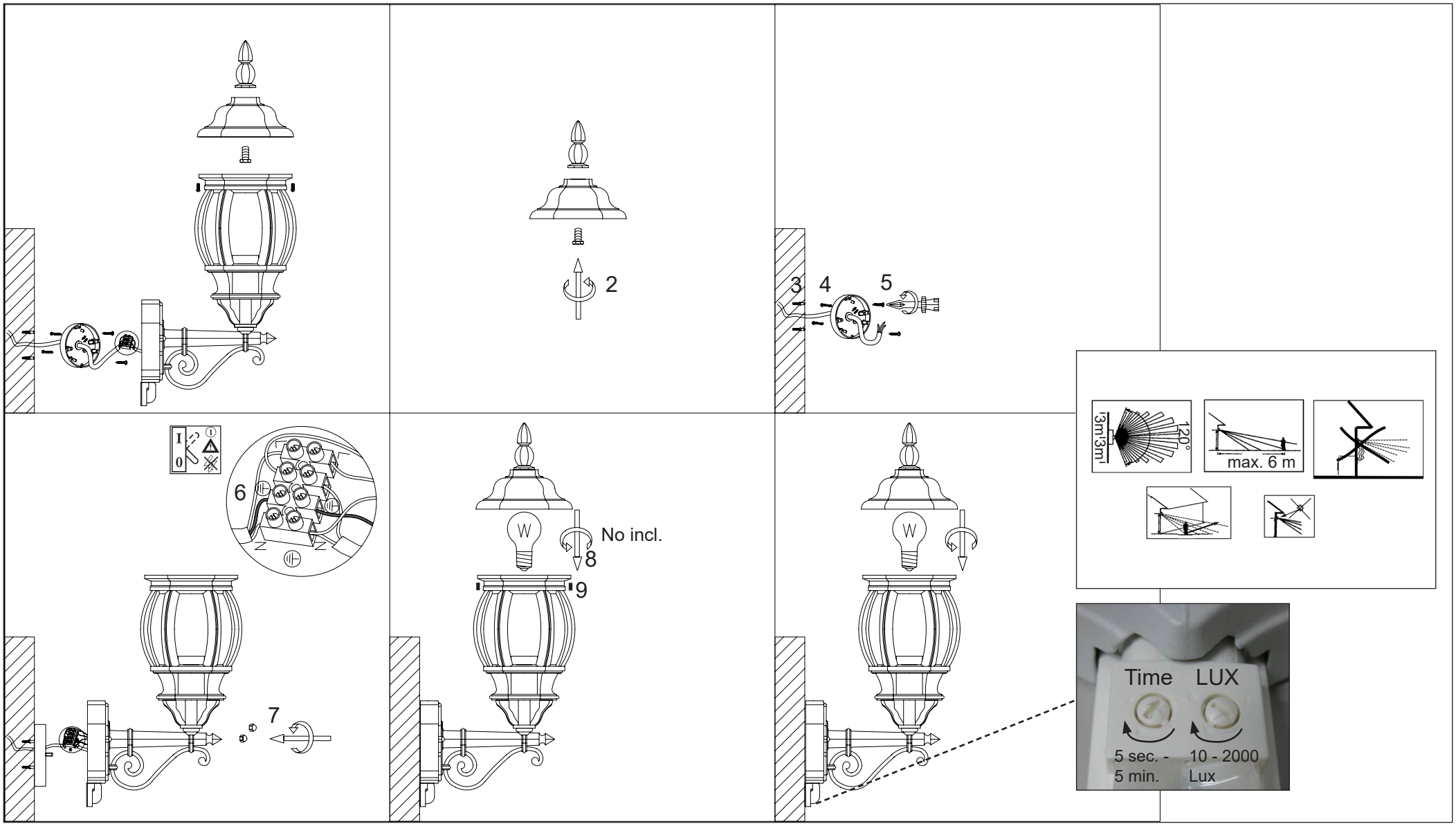
05.12