Brilliant
THE JEWEL IN LIGHTING

Relax
61170...
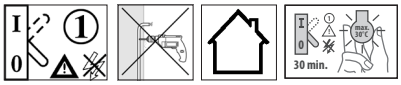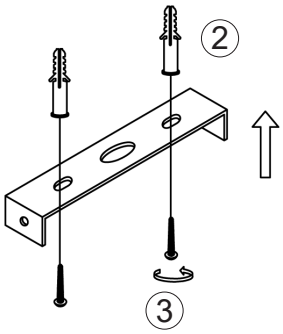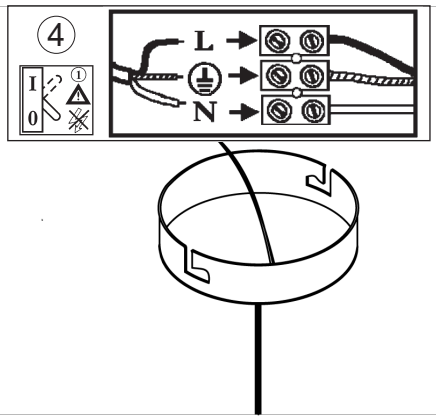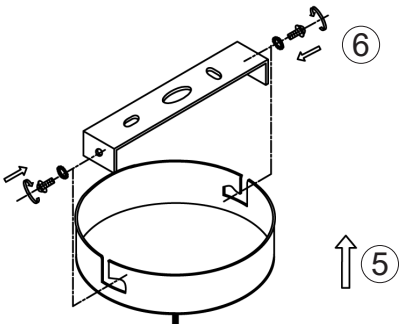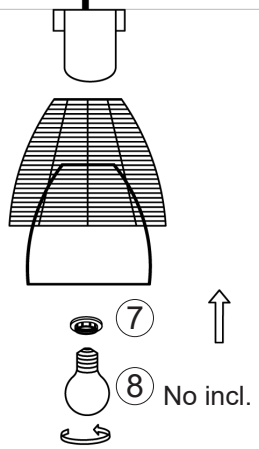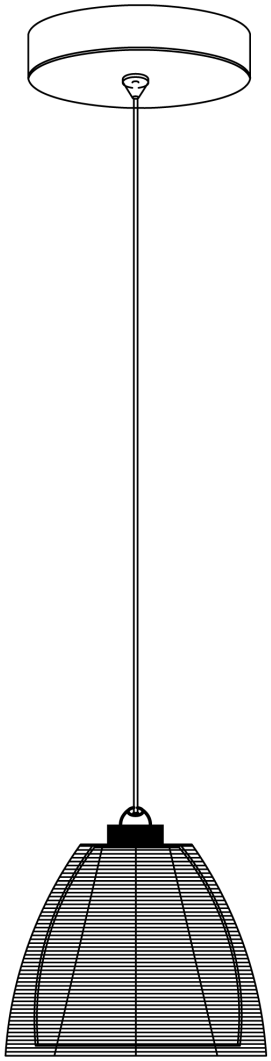
02.18