Brilliant
THE JEWEL IN LIGHTING

Relax
61171...

02.18

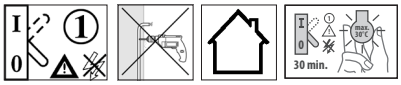

2

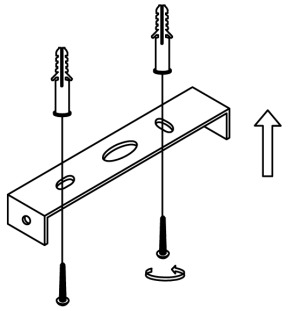

3

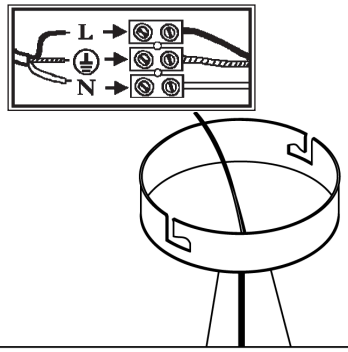

4

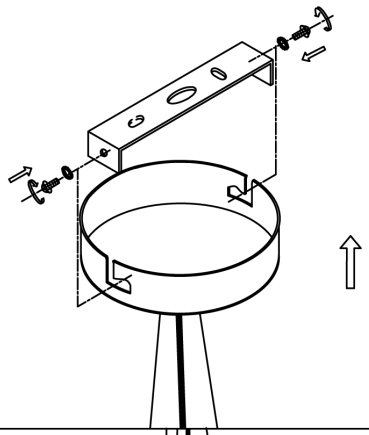

5

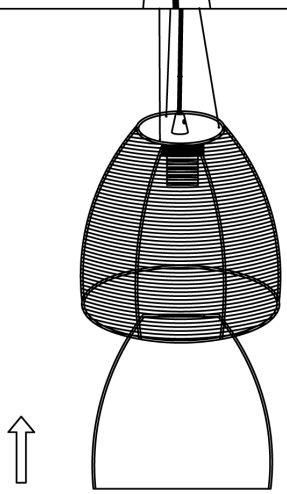

6

7
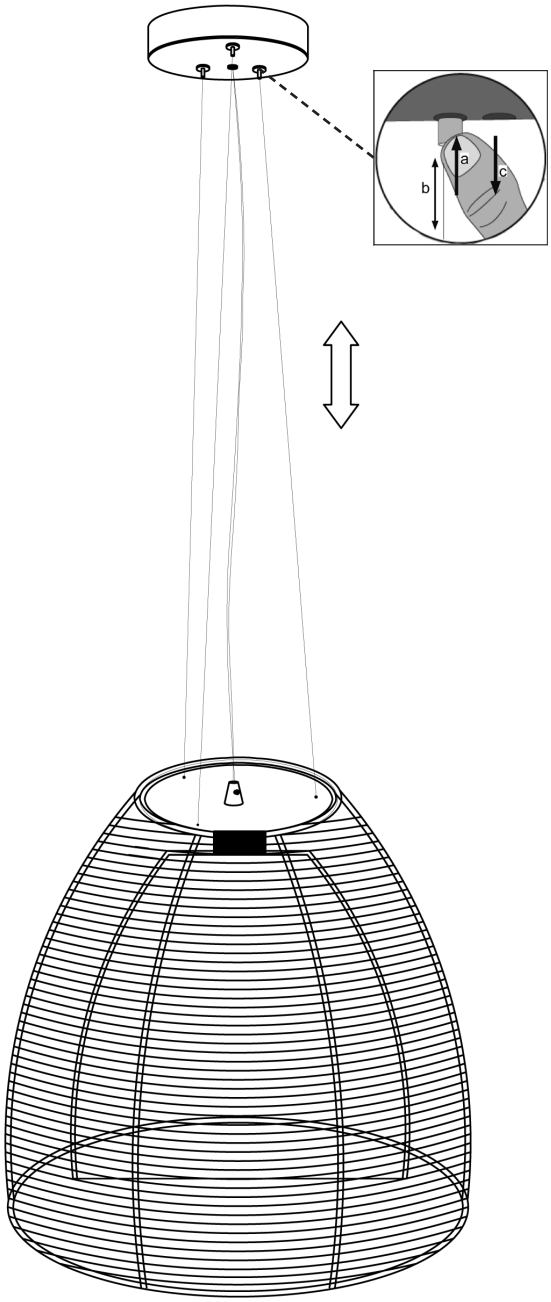
No incl.