Brilliant
THE JEWEL IN LIGHTING

Relax
61176...
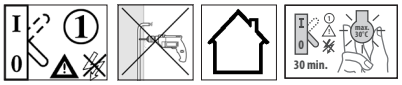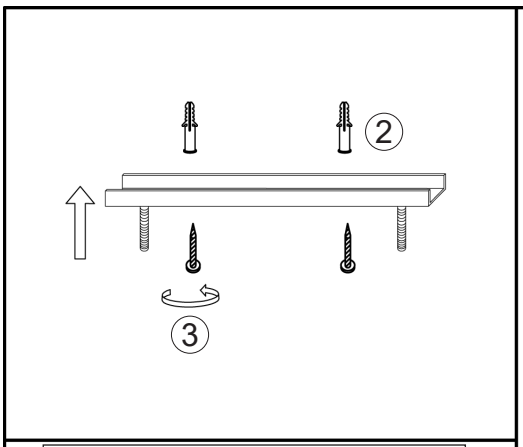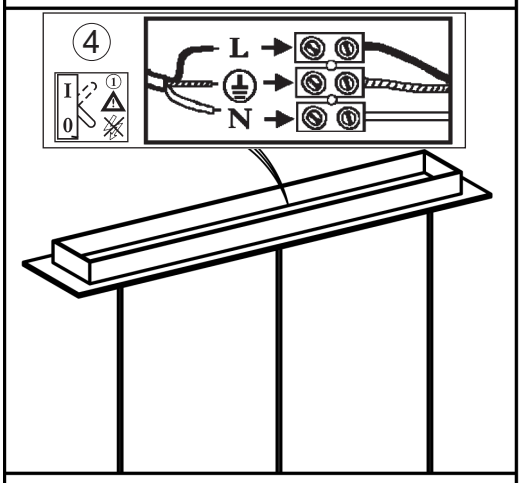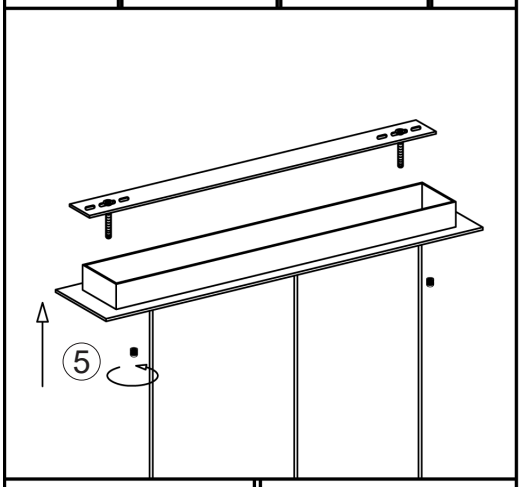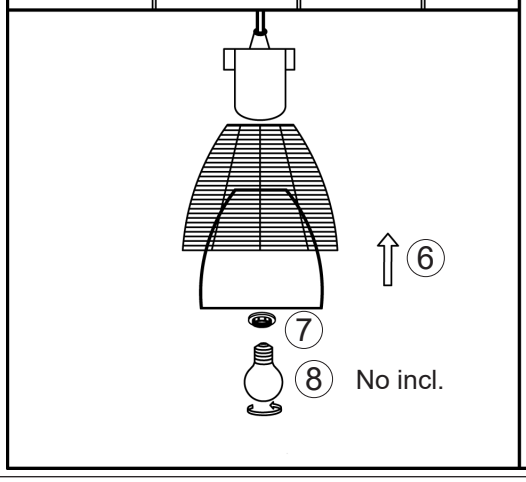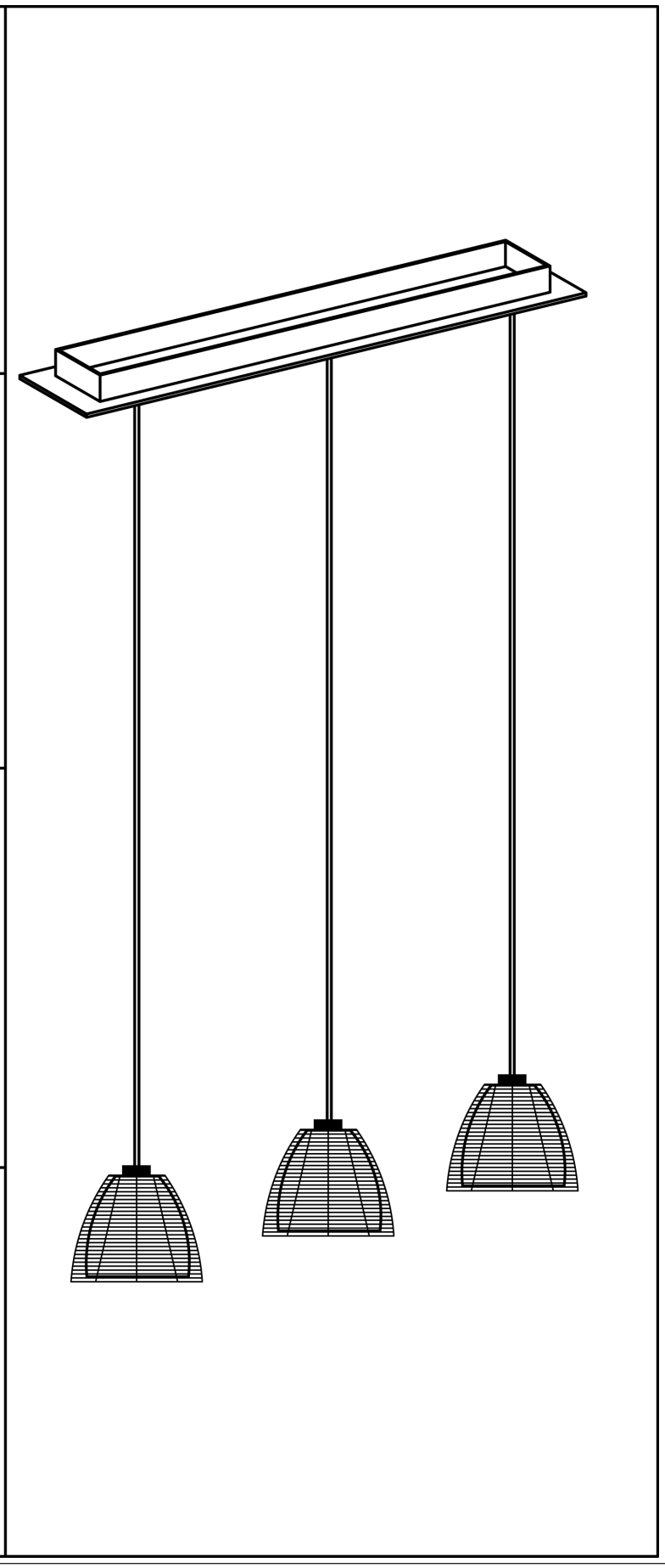
02.18