Brilliant
THE JEWEL IN LIGHTING

# Relax
61190... - 400mm
61191... - 500mm
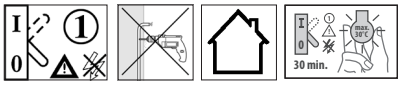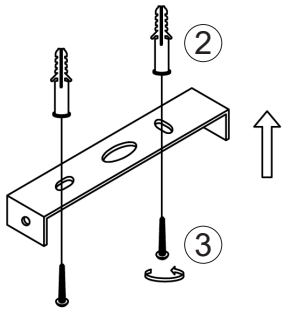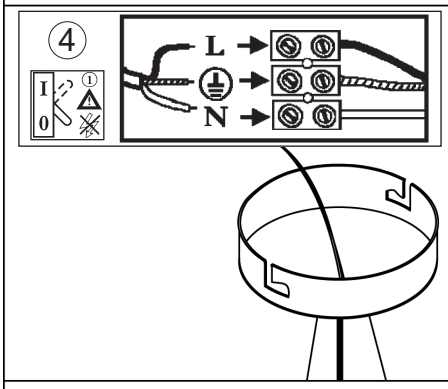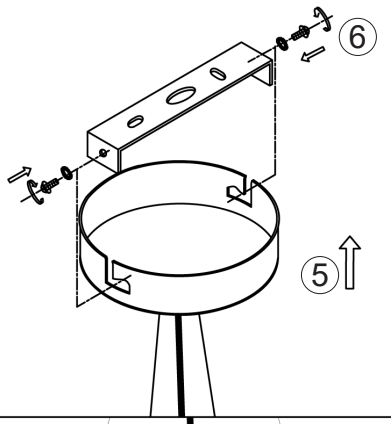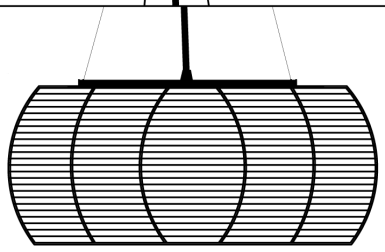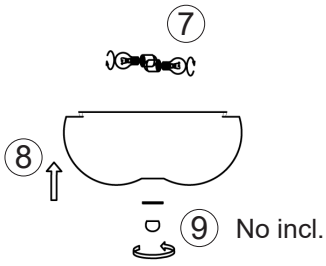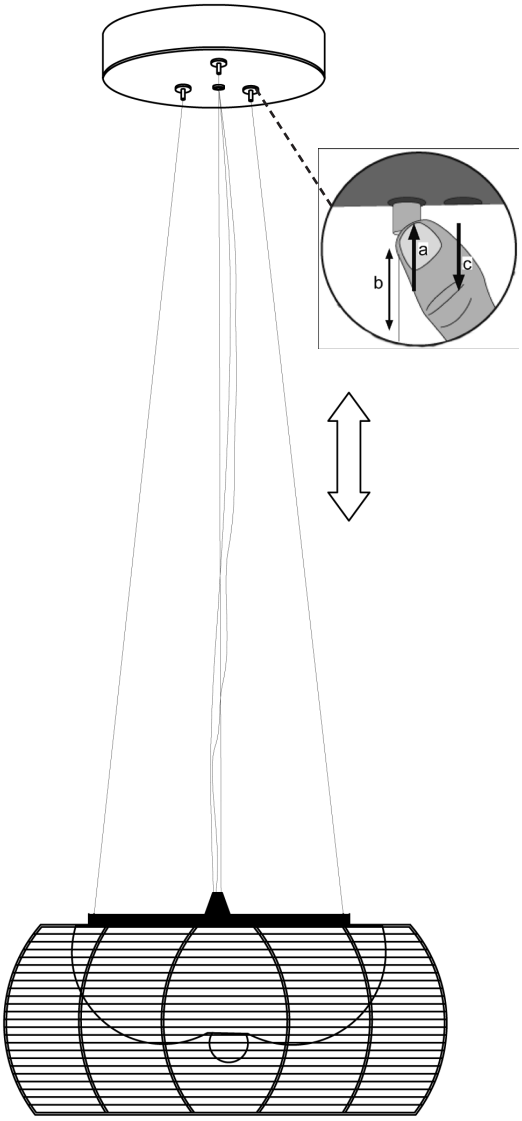
02.18