Brilliant
THE JEWEL IN LIGHTING

Beth
75547...
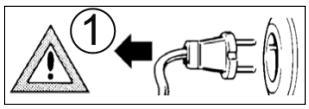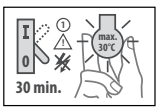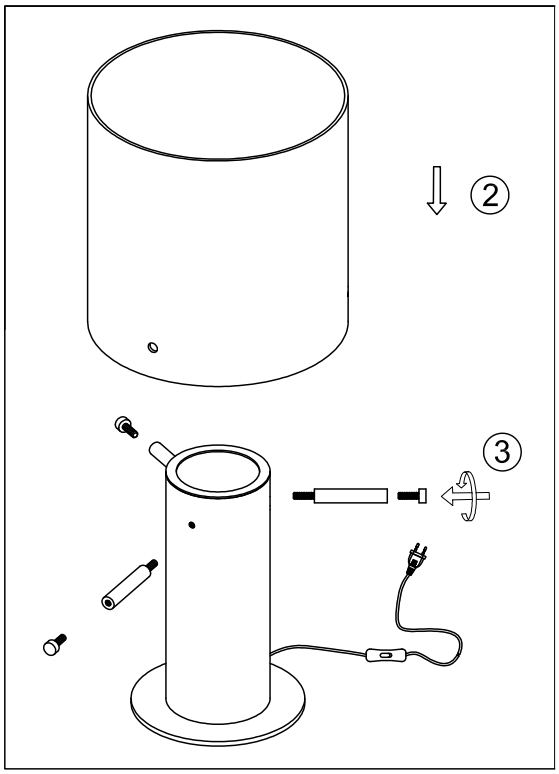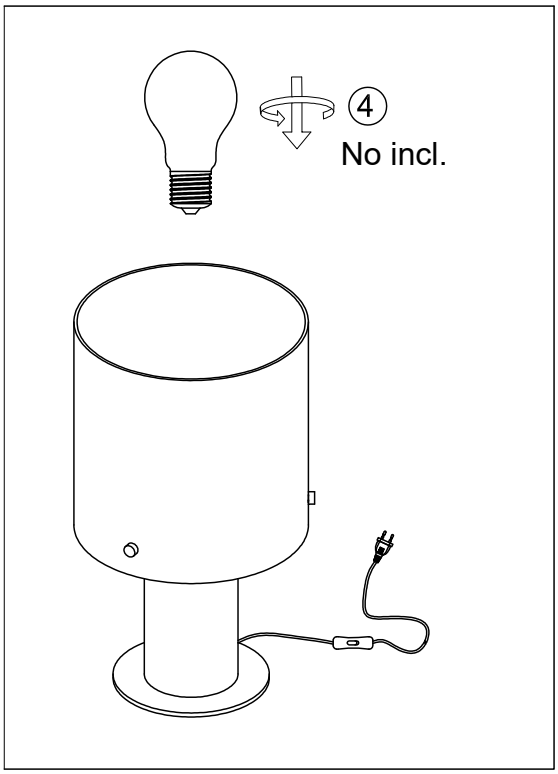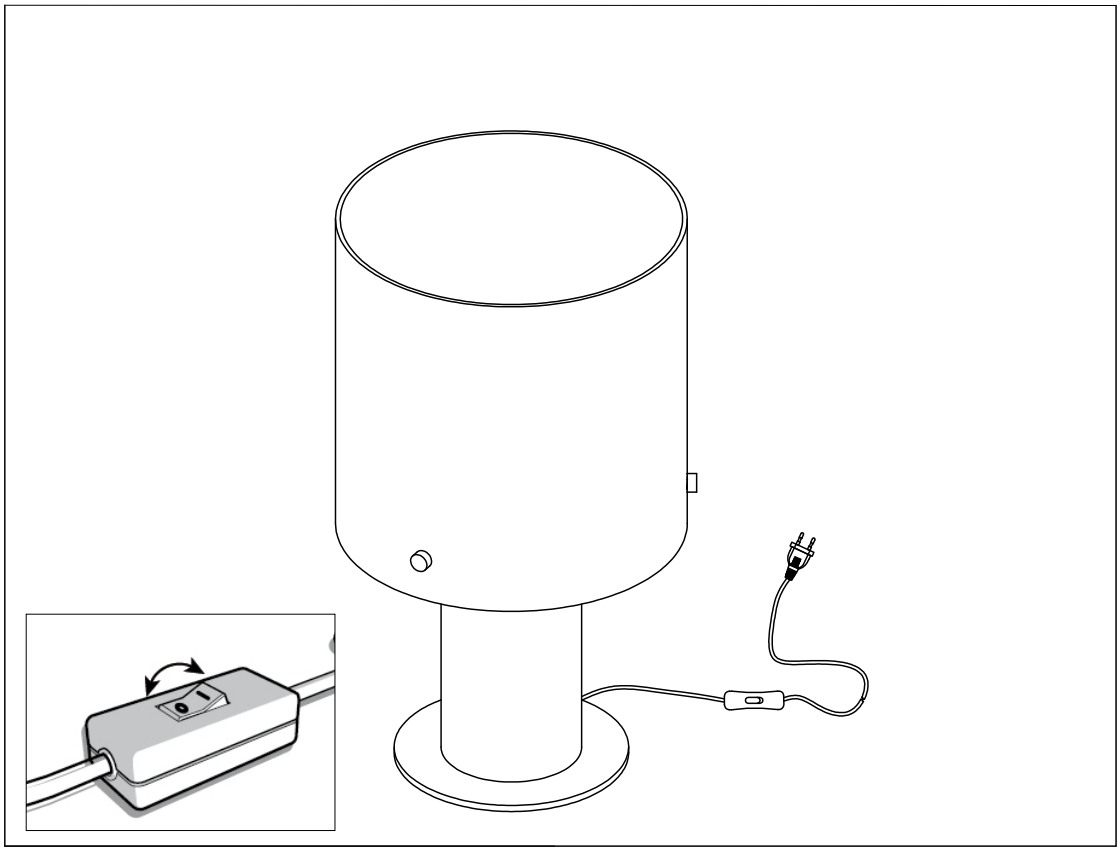
06.19