Brilliant
THE JEWEL IN LIGHTING

Beth
75591...
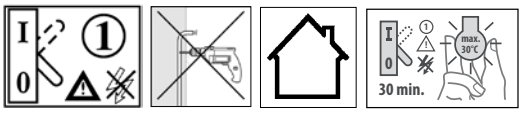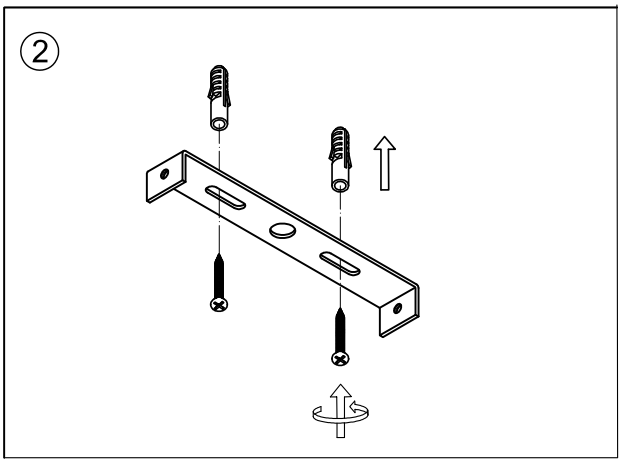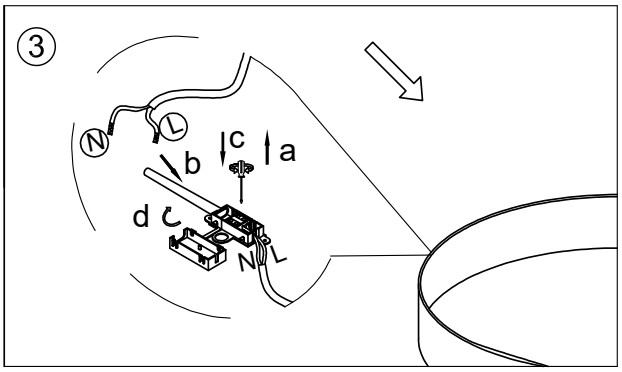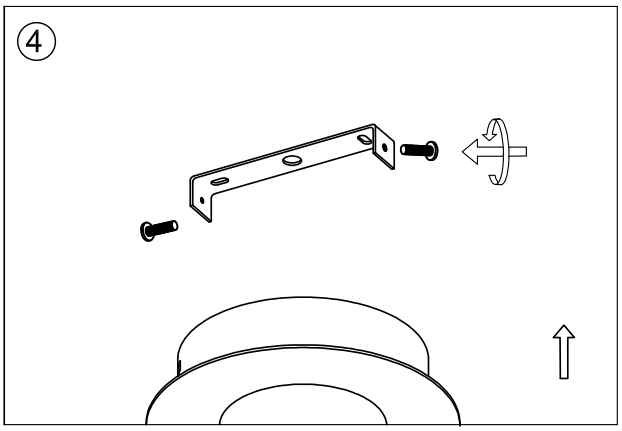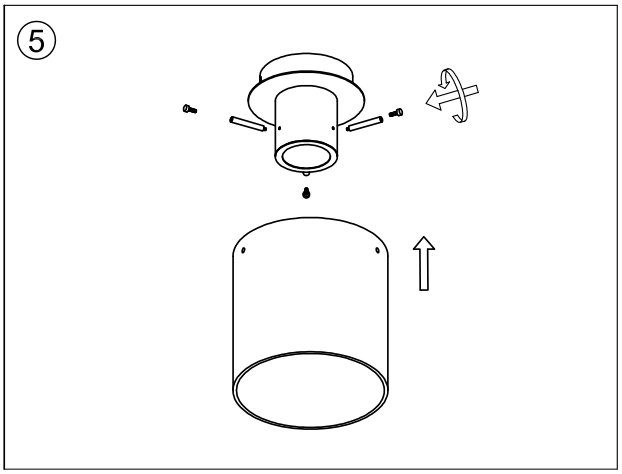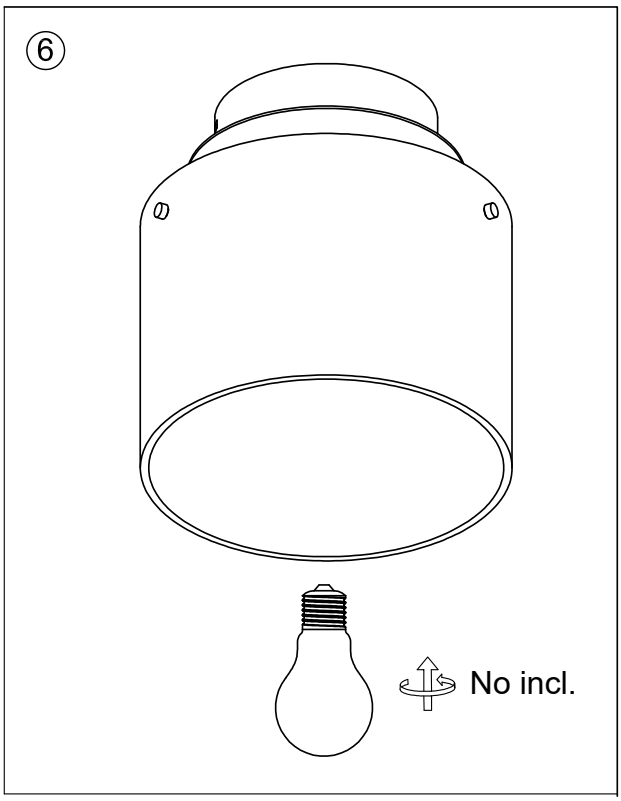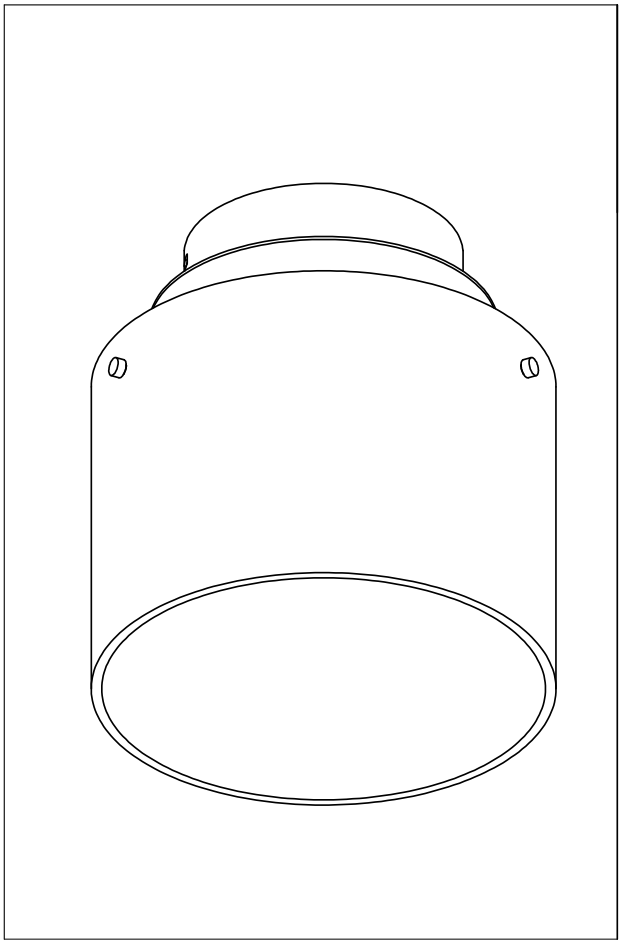
06.19