Brilliant
THE JEWEL IN LIGHTING

Moka
75713...
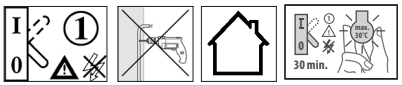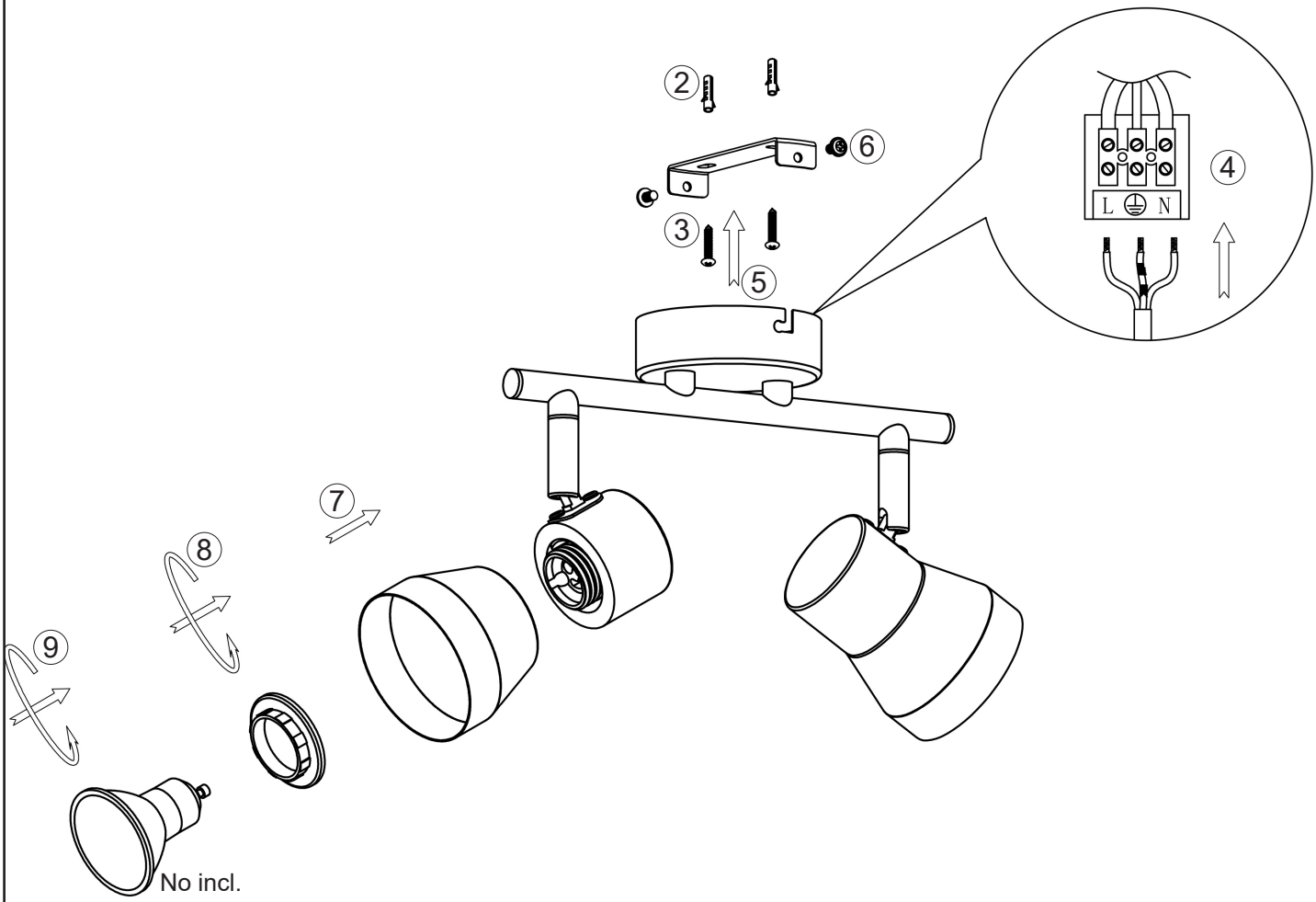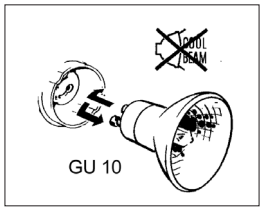
04.18