Brilliant
THE JEWEL IN LIGHTING

Moka
75734...
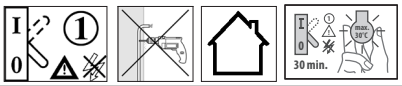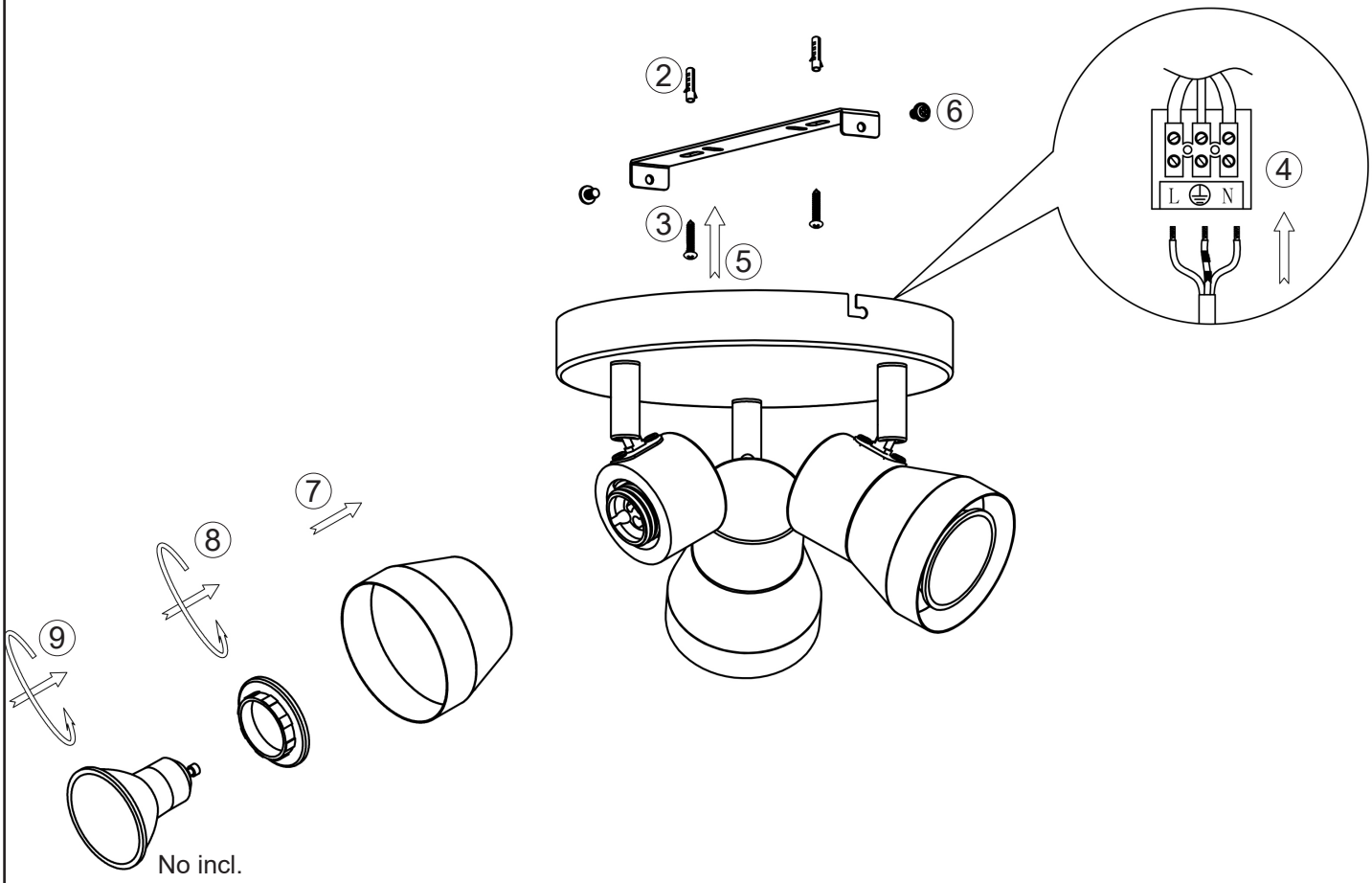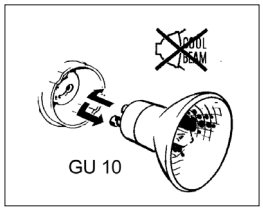
04.18