Brilliant
THE JEWEL IN LIGHTING

Ester
90048...

05.17

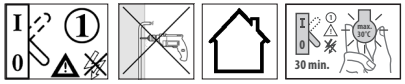

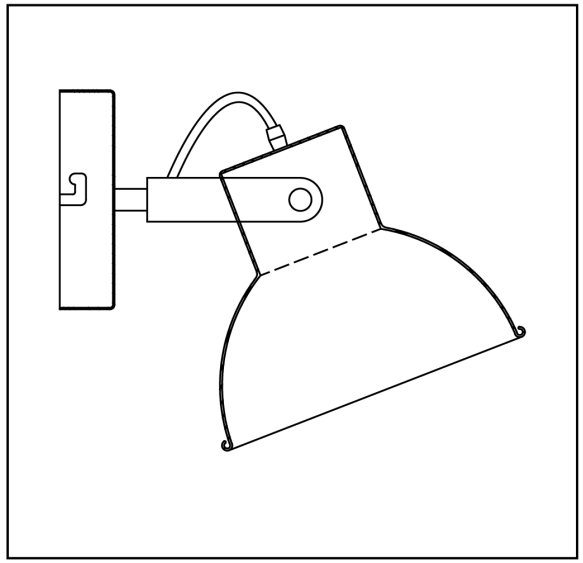

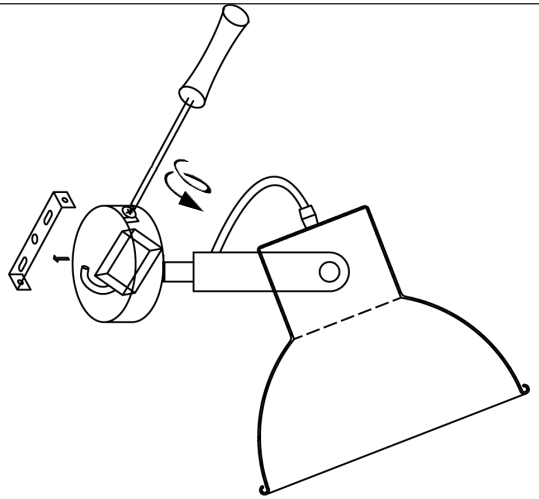

2

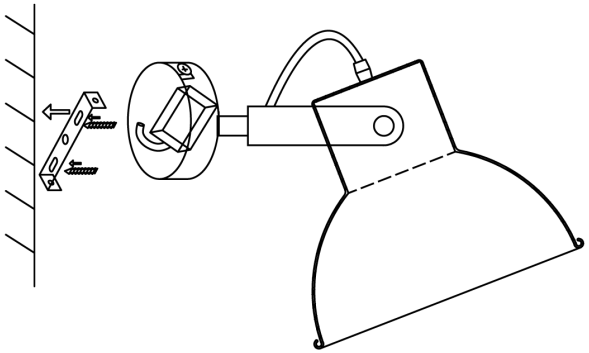

3

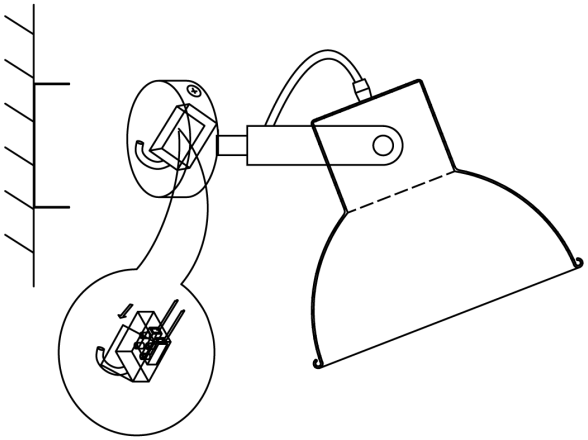

4

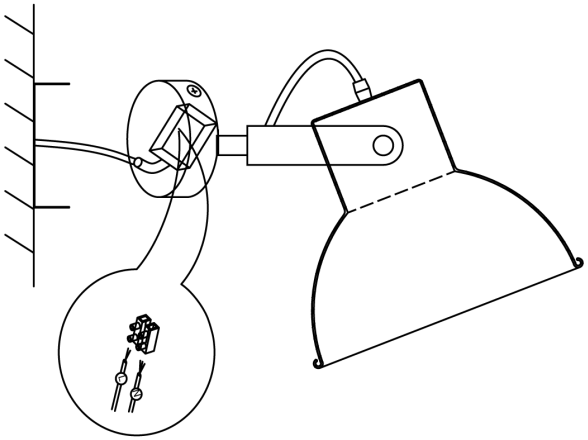

5

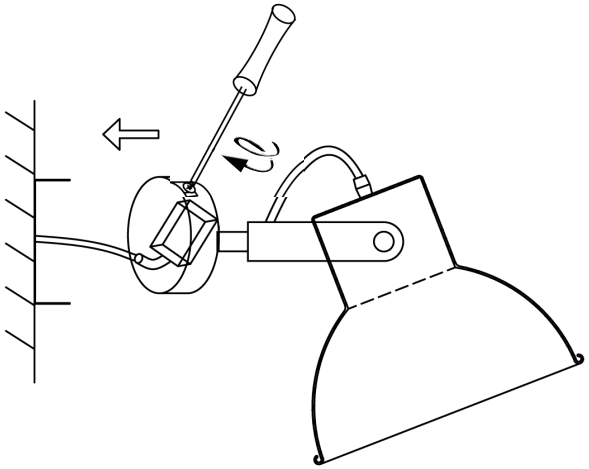

6