Brilliant

GRACIAN
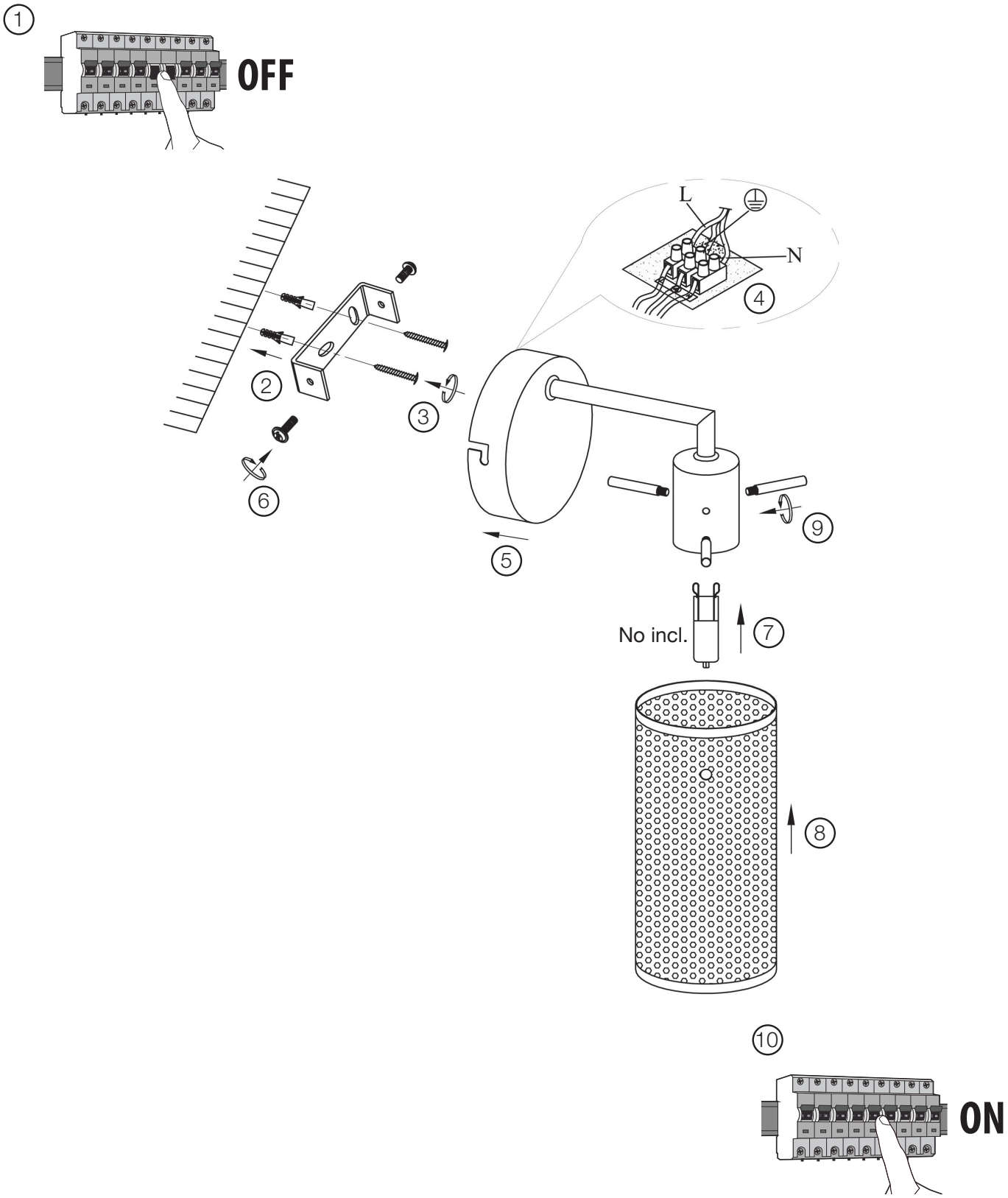
90060...