Brilliant
THE JEWEL IN LIGHTING

Miramar
90191...
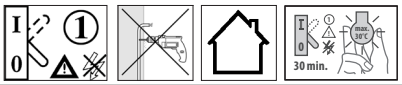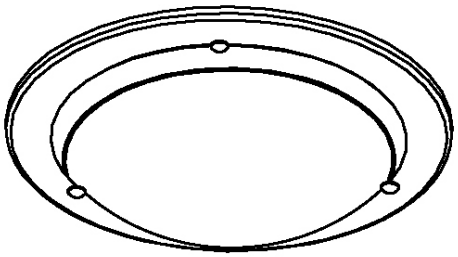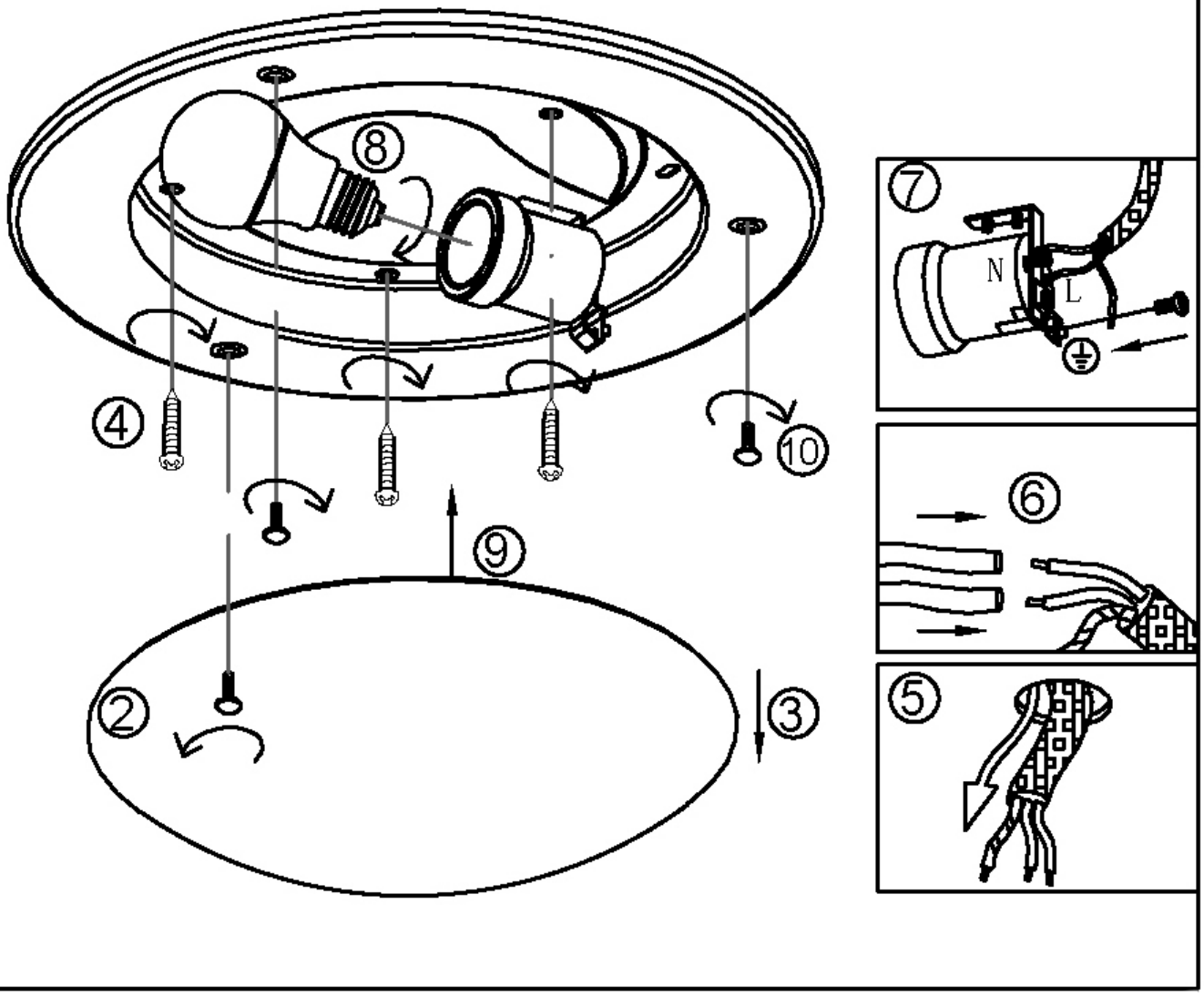
03.19