Brilliant
THE JEWEL IN LIGHTING

Elysee

06.11

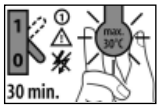

90266...

90267...

90268...

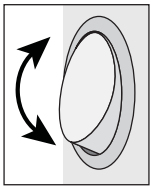

2

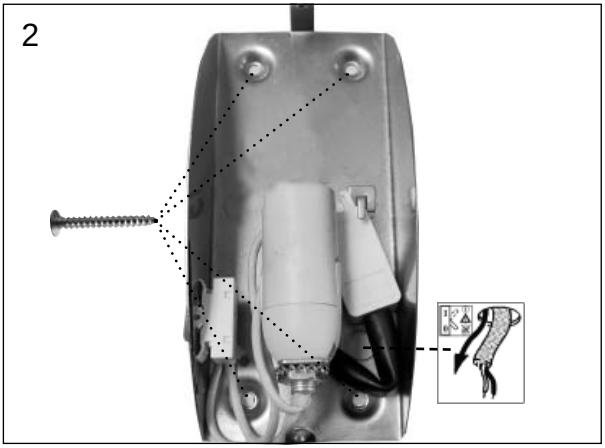

3

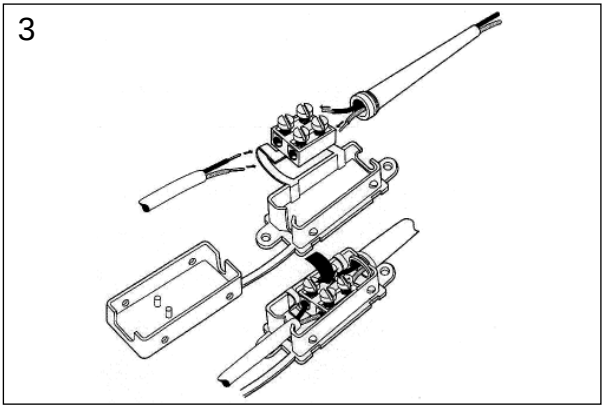

4

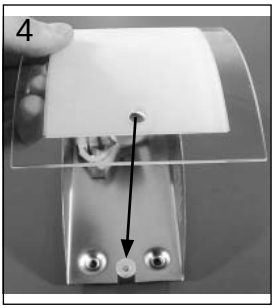
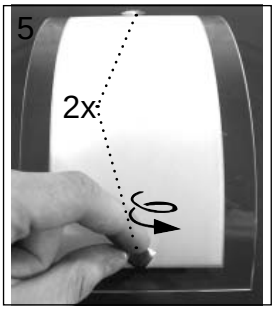
5