Brilliant
THE JEWEL IN LIGHTING

Livorno
90288...

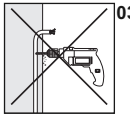

03.08

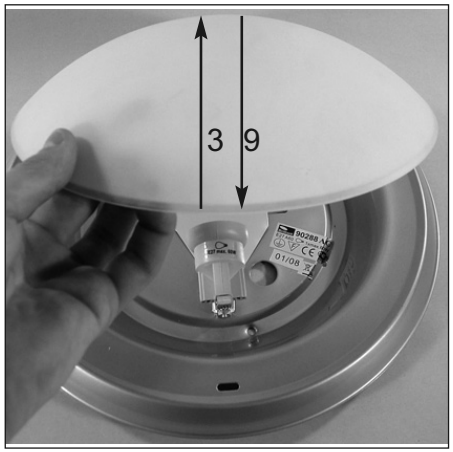

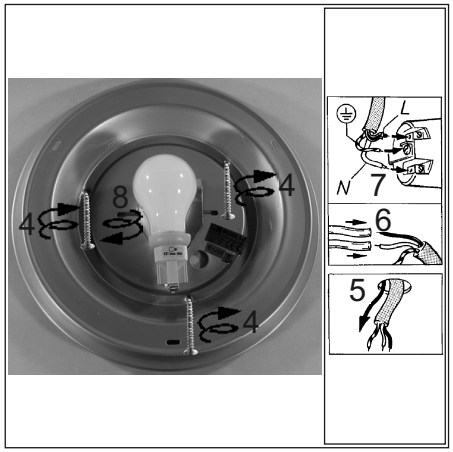

Brilliant
THE JEWEL IN LIGHTING

Livorno
90288...

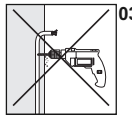
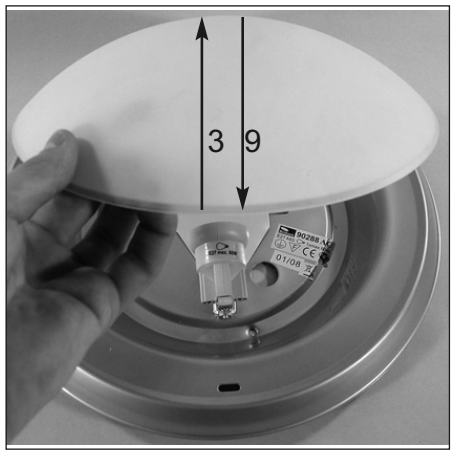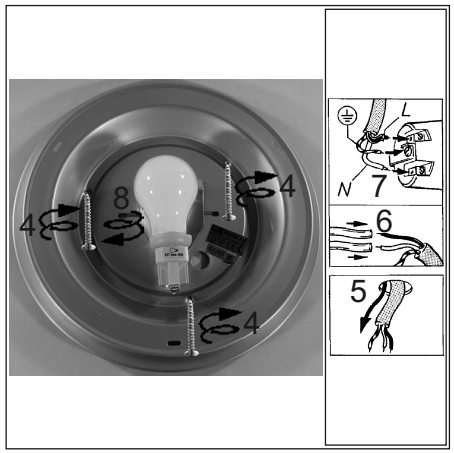
03.08