Brilliant
THE JEWEL IN LIGHTING

Sonian
90323...
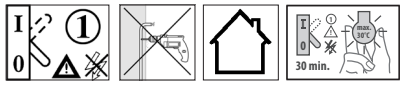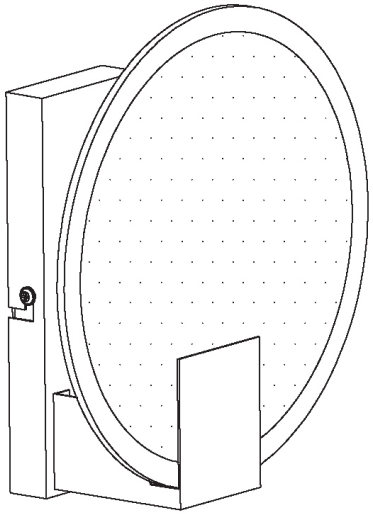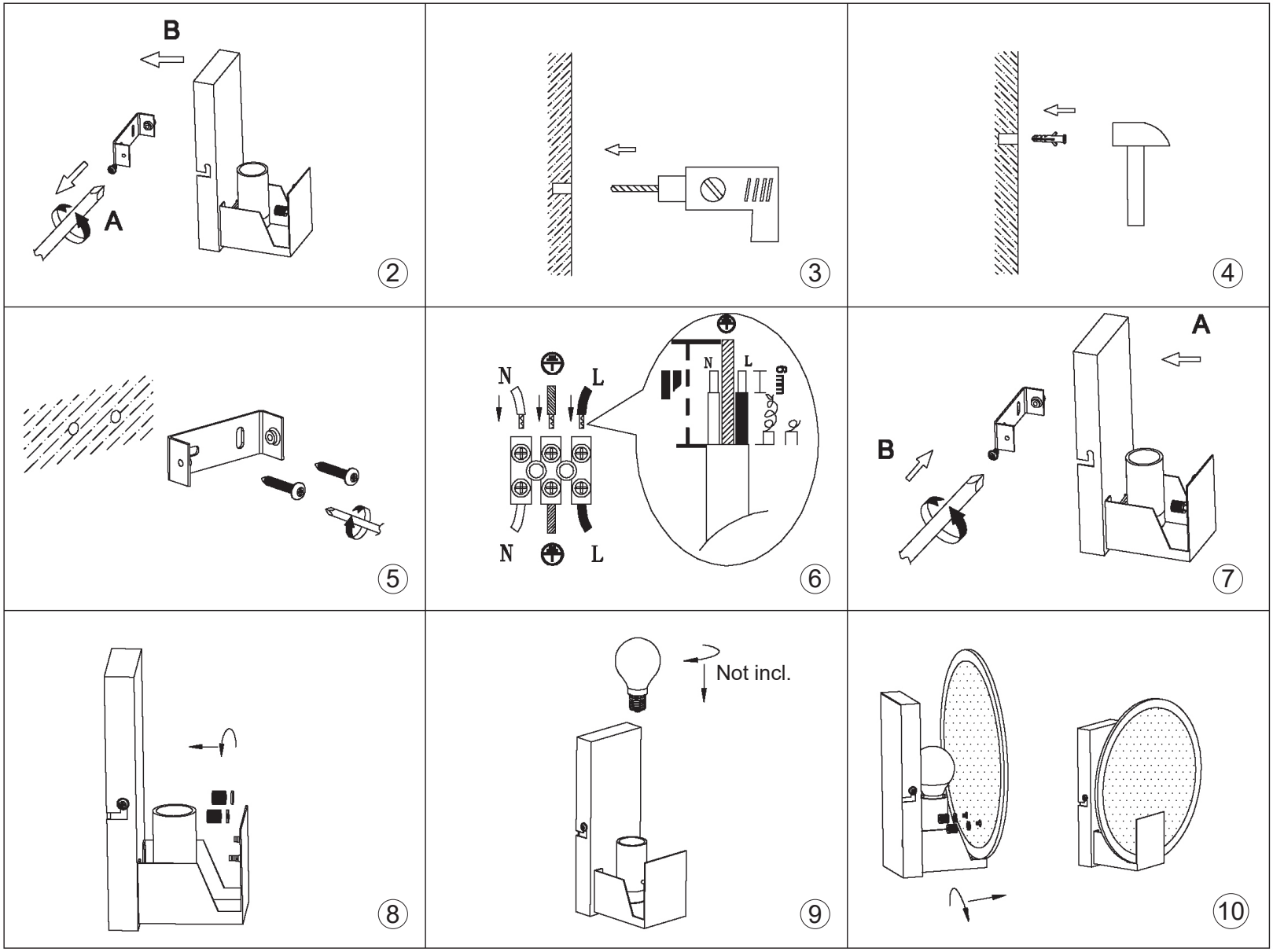
09.19