Brilliant
THE JEWEL IN LIGHTING

Sonian

90323..., 90324...
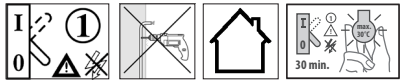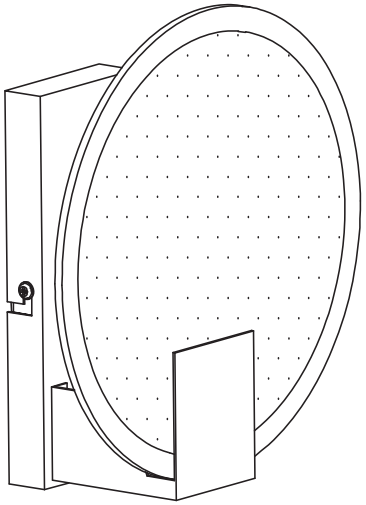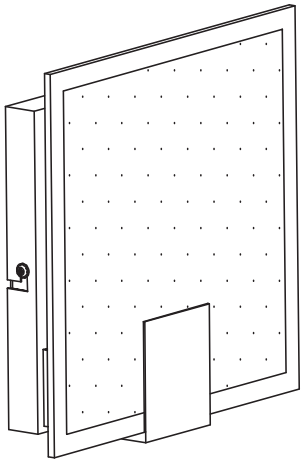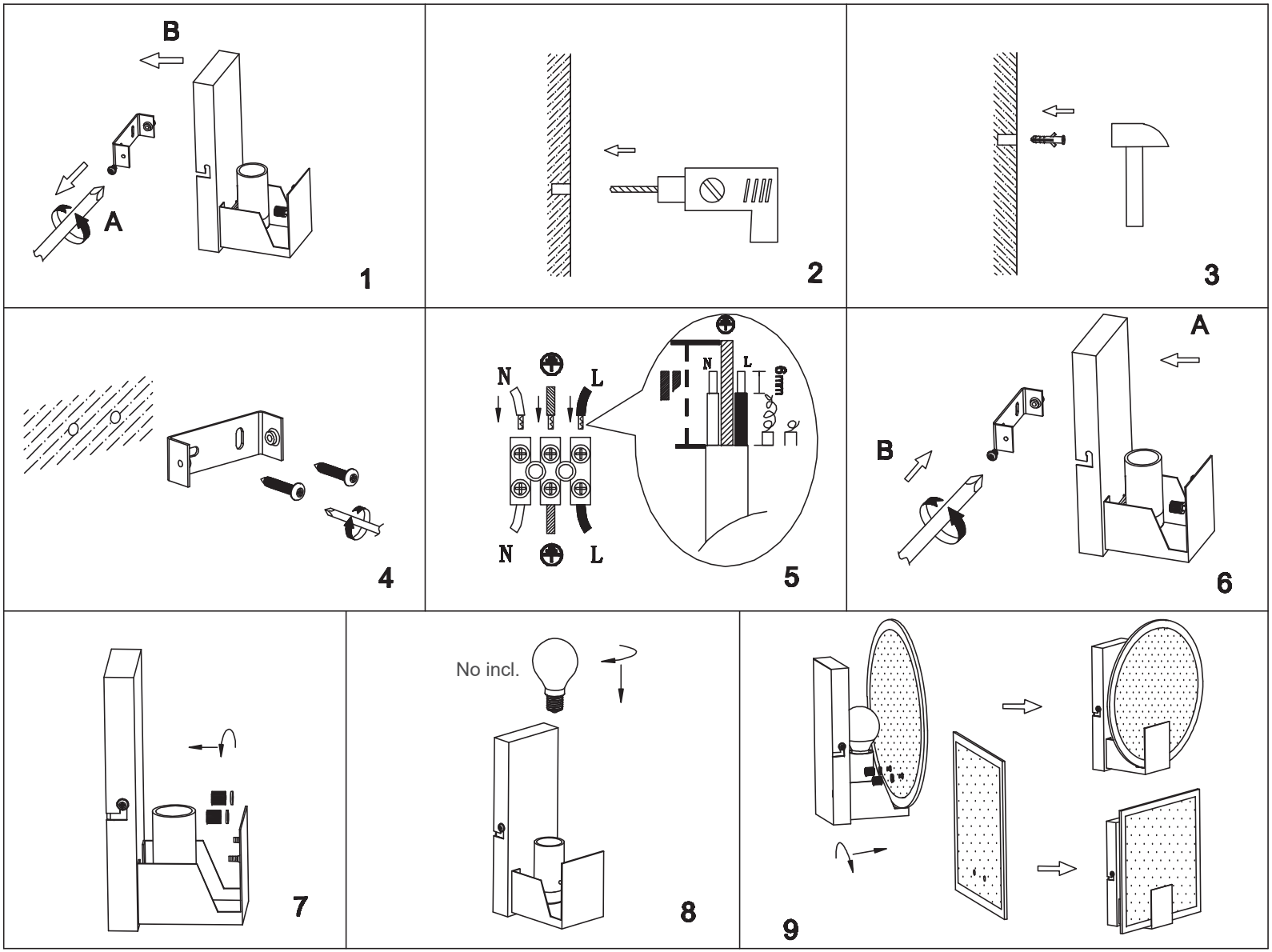
09.19