Brilliant

THE JEWEL IN LIGHTING

Helyn
90918...

06.18

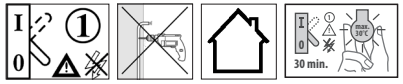

2

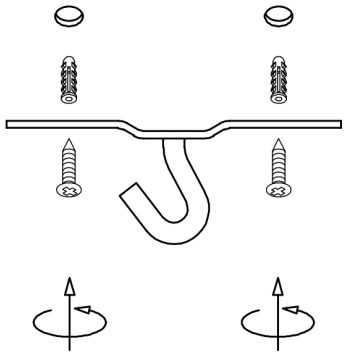

3

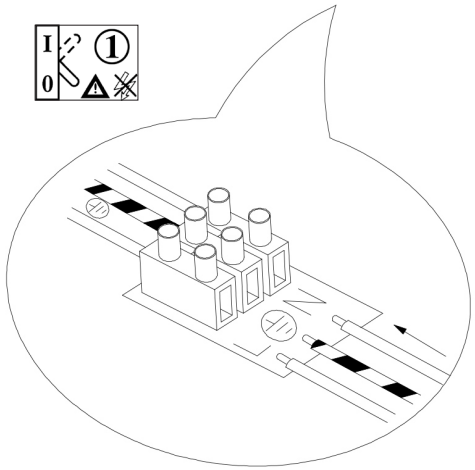

4

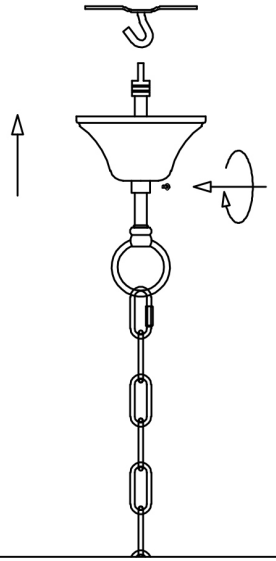

5

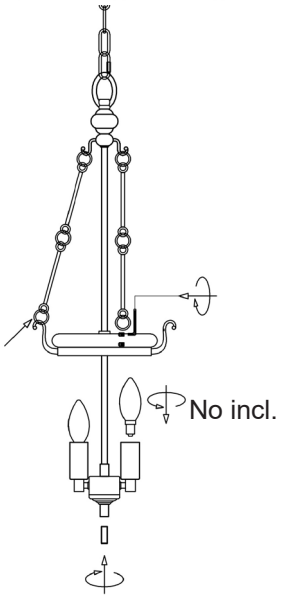

6

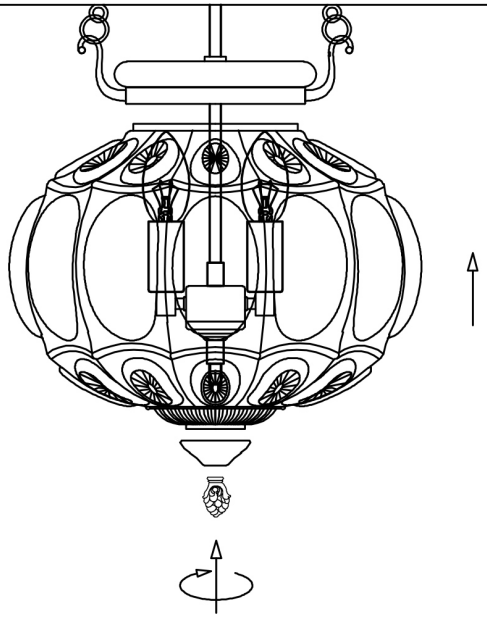
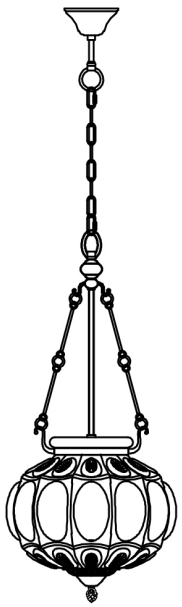
7