Brilliant
THE JEWEL IN LIGHTING

Frieda

93252... - 400mm
93253... - 500mm
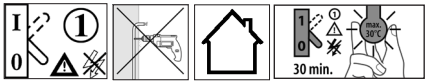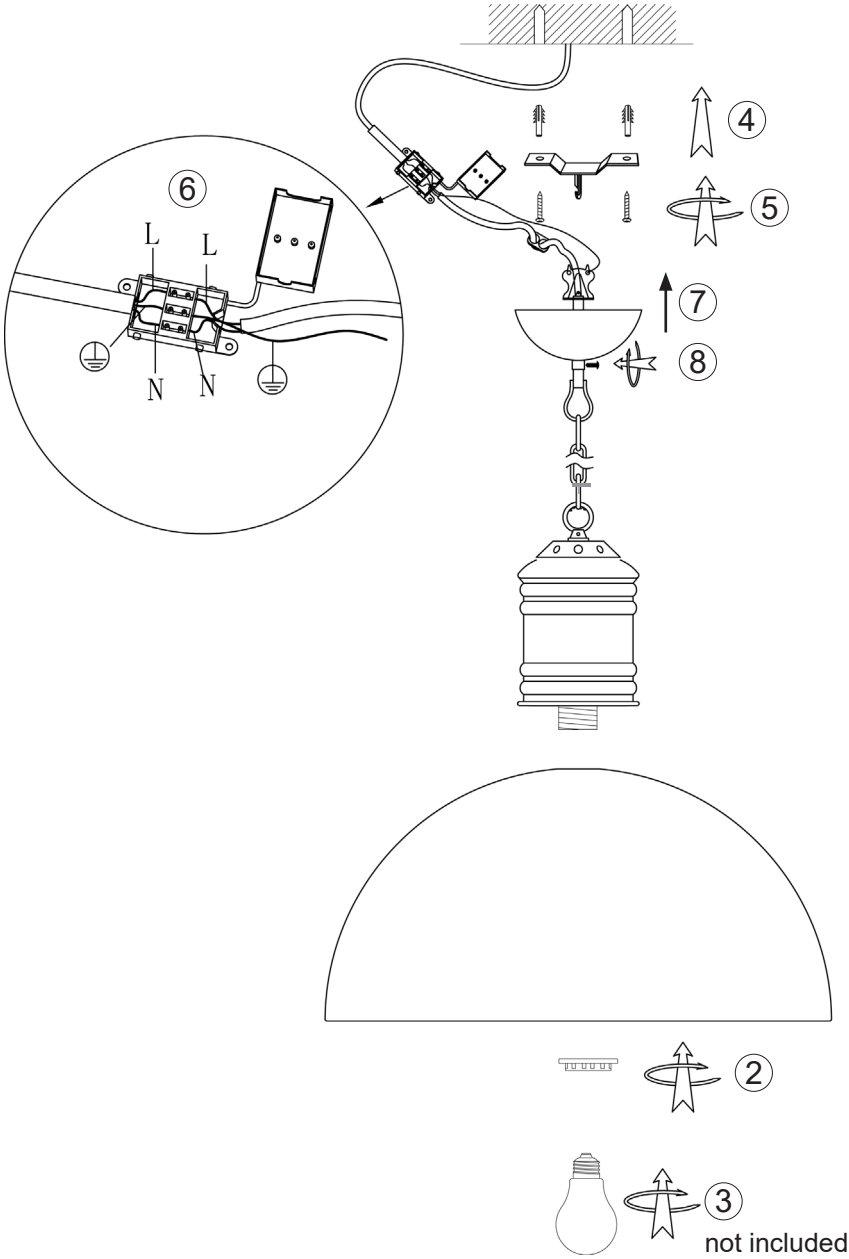
04.17