Brilliant
THE JEWEL IN LIGHTING

Fantasia
93277...
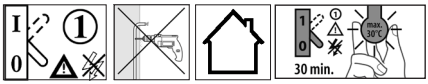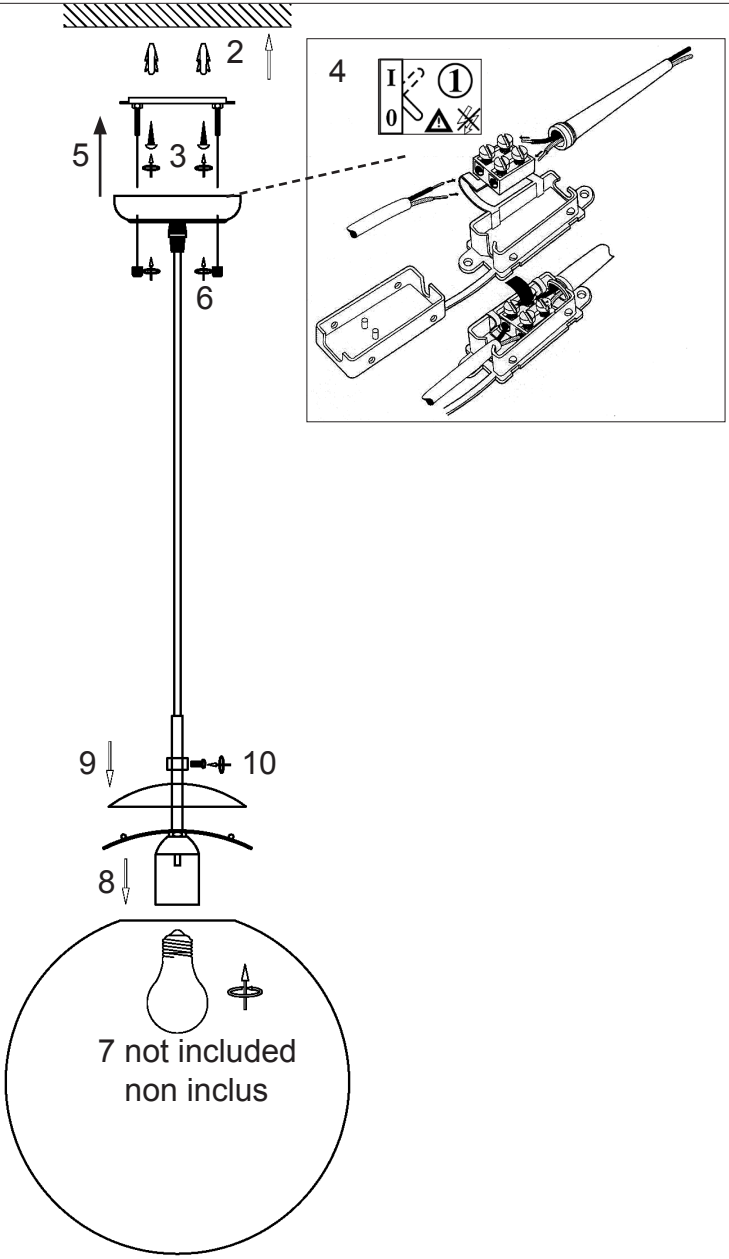
07.15