Brilliant
THE JEWEL IN LIGHTING

Salford
93590...
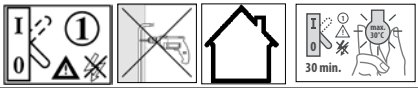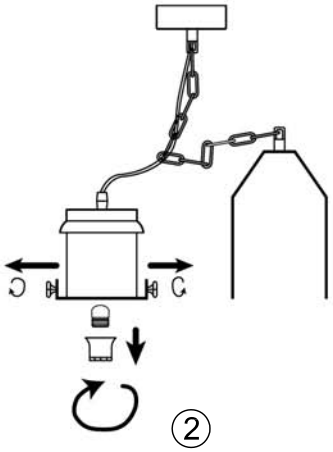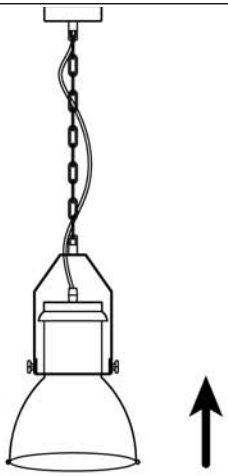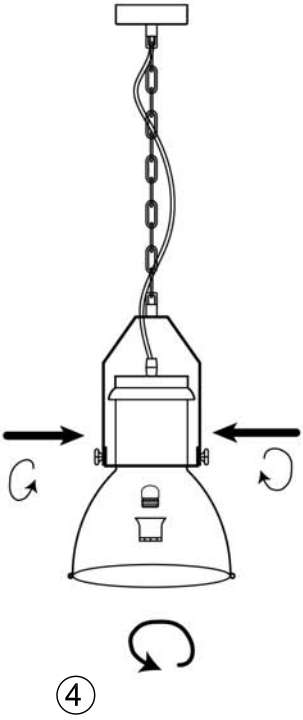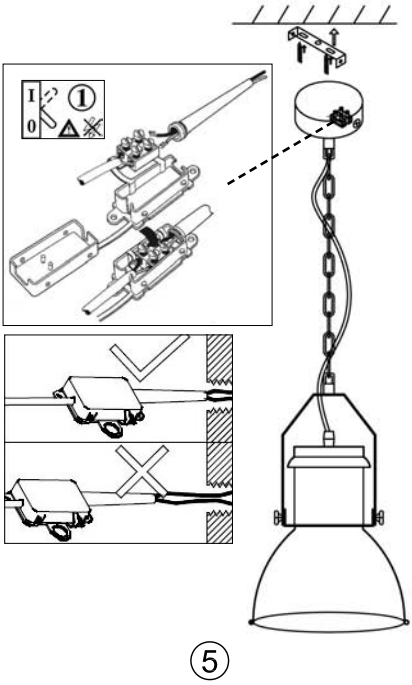
08.17