Brilliant
THE JEWEL IN LIGHTING

Tycho
93594...
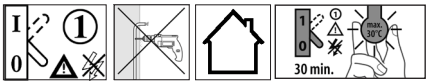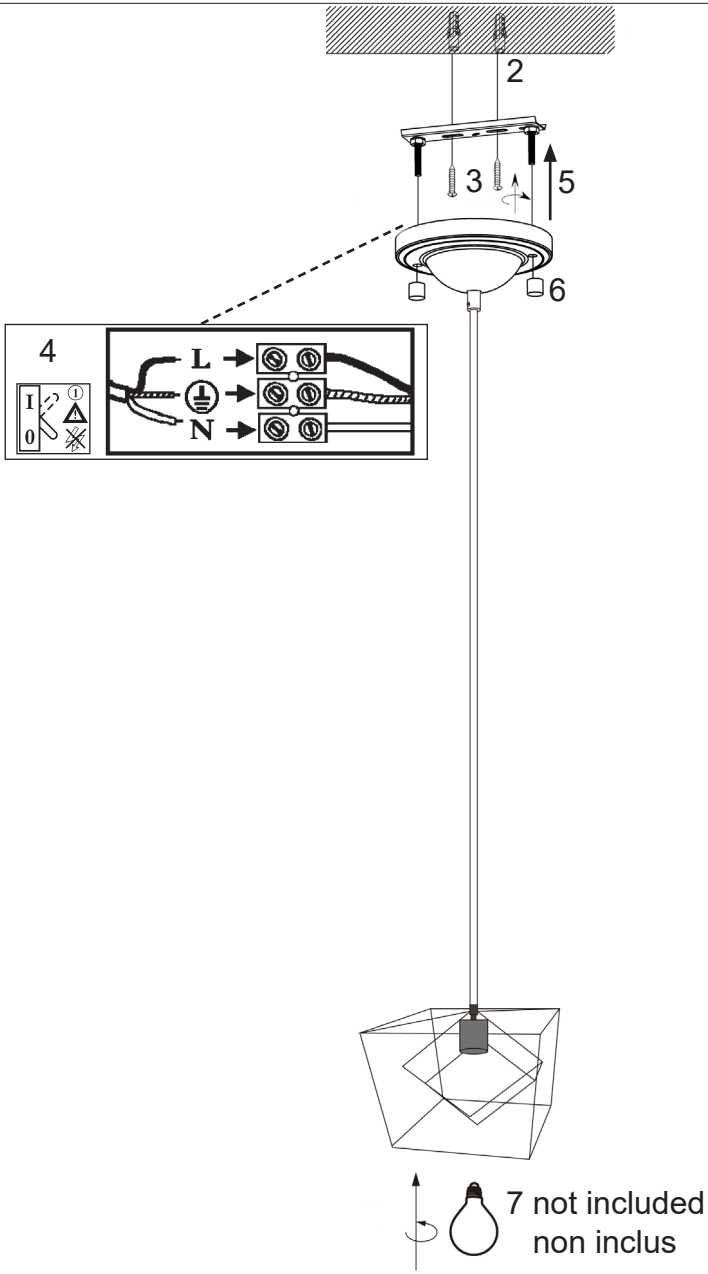
02.16