Brilliant
THE JEWEL IN LIGHTING

Tyler WA
96104...

01.15

01

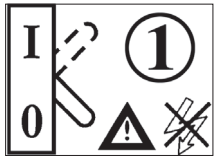

03

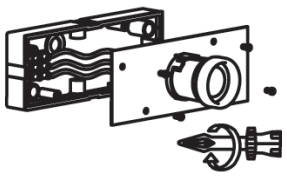

05

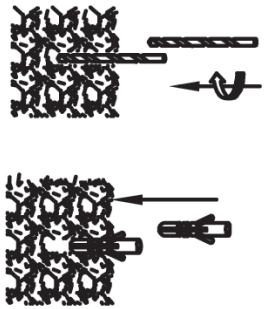

07

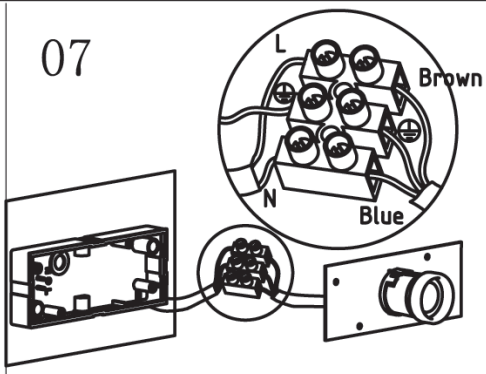

09

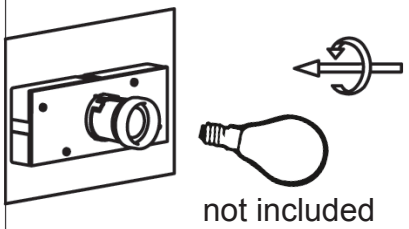

02

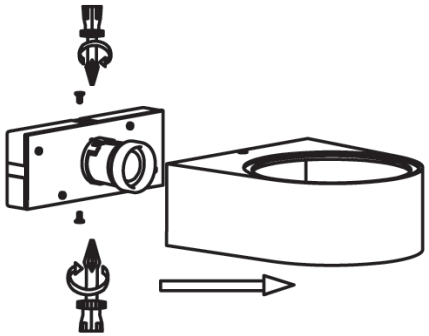

04

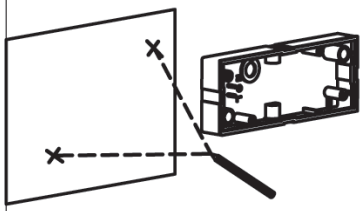

06

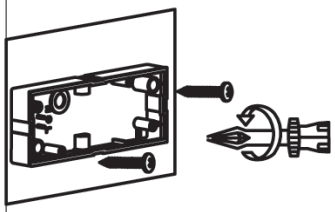

08

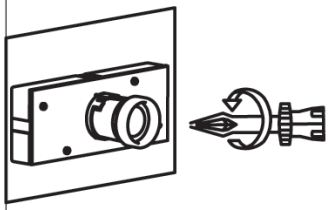
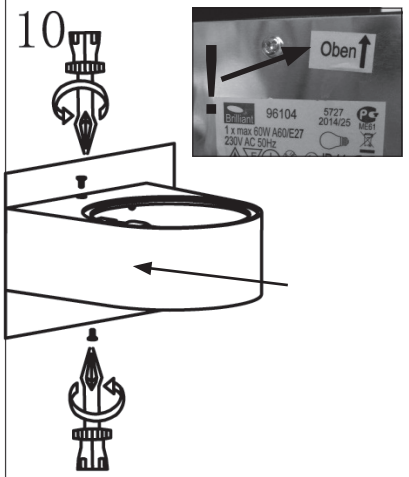
10