Brilliant
THE JEWEL IN LIGHTING

Irvin
96186...
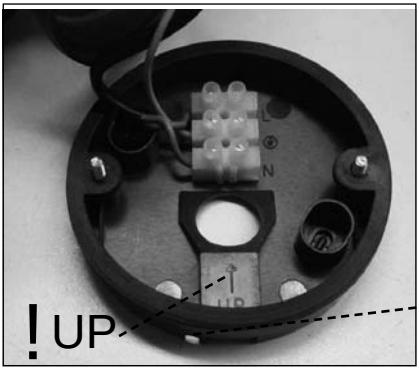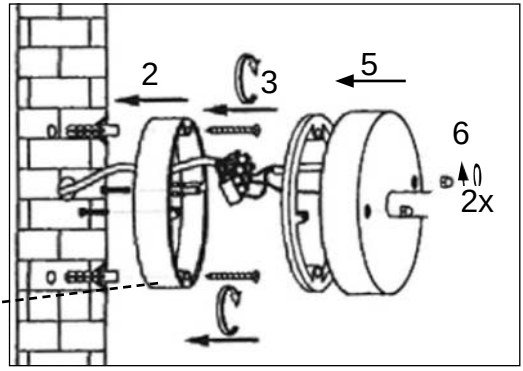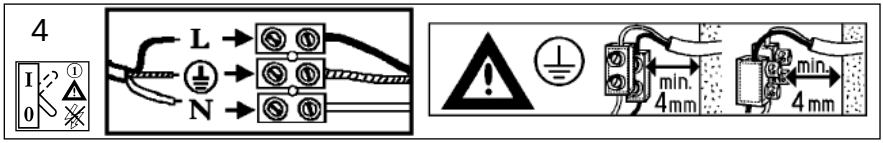
12.11