Brilliant
THE JEWEL IN LIGHTING

Emma
96881...
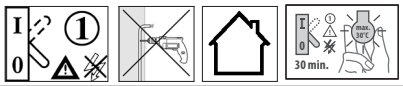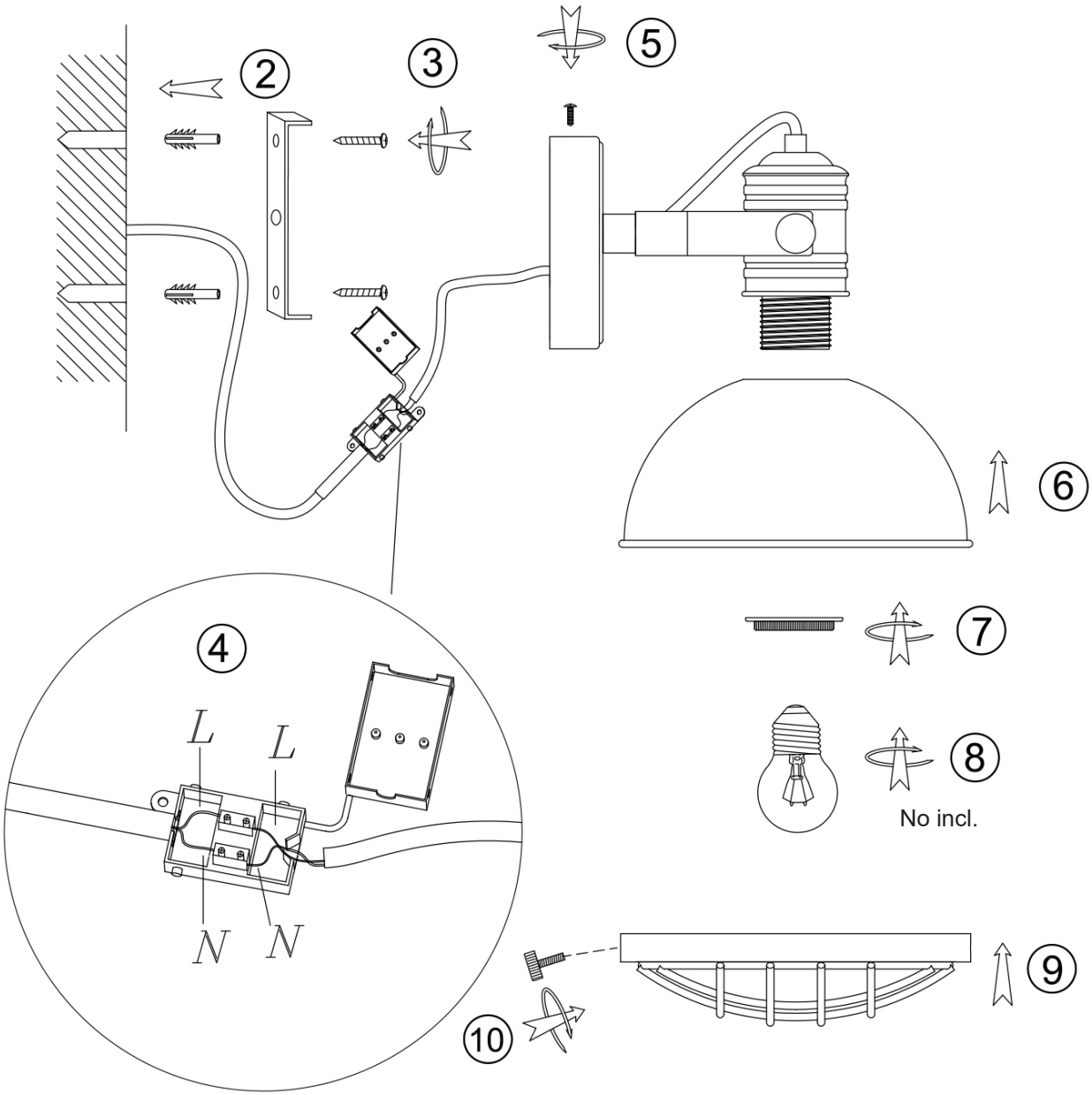
05.18