Brilliant
THE JEWEL IN LIGHTING

Telio
96856...

04.18

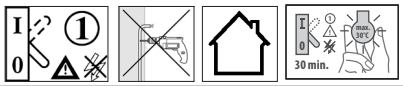

2

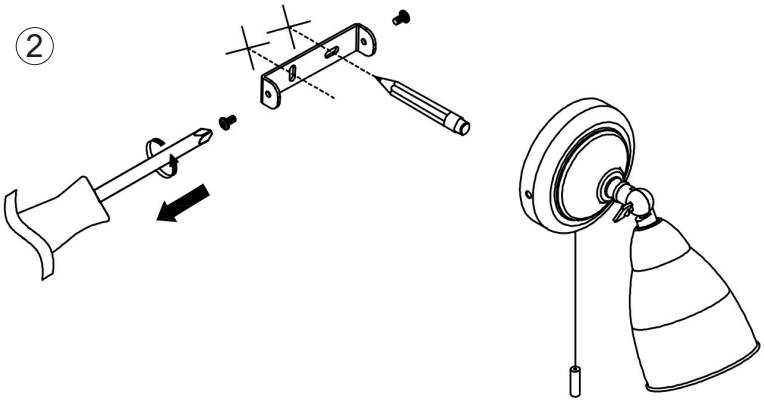

3

4

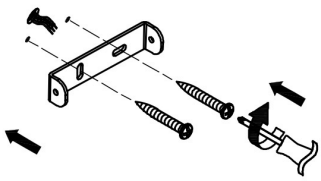

5

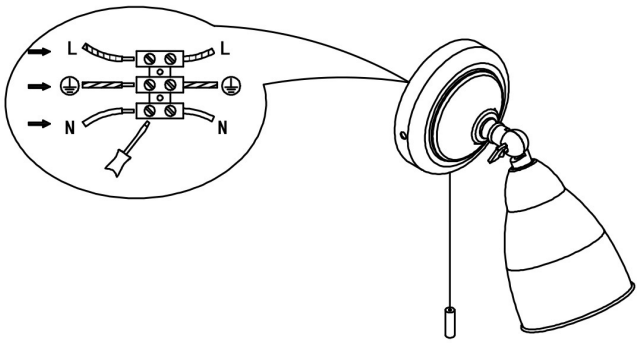

6

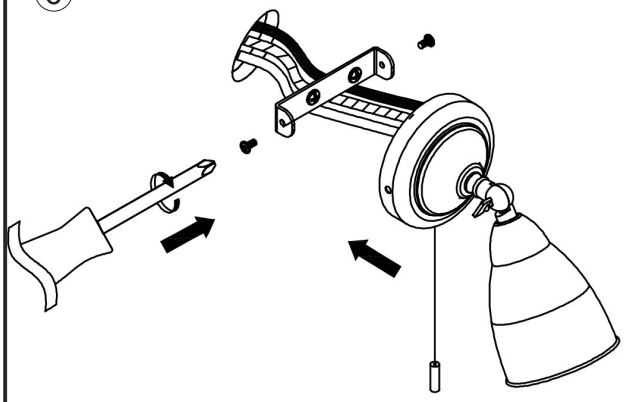
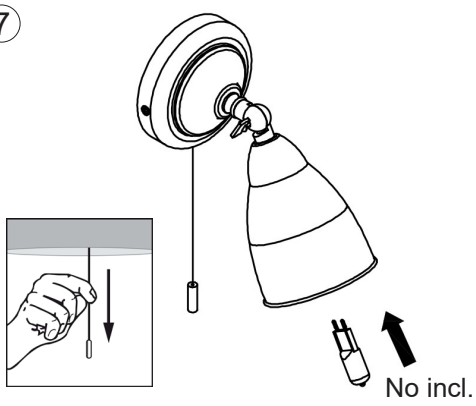
7