Brilliant
THE JEWEL IN LIGHTING

Jarbo
98977...
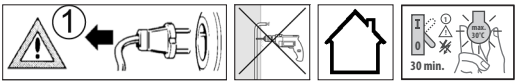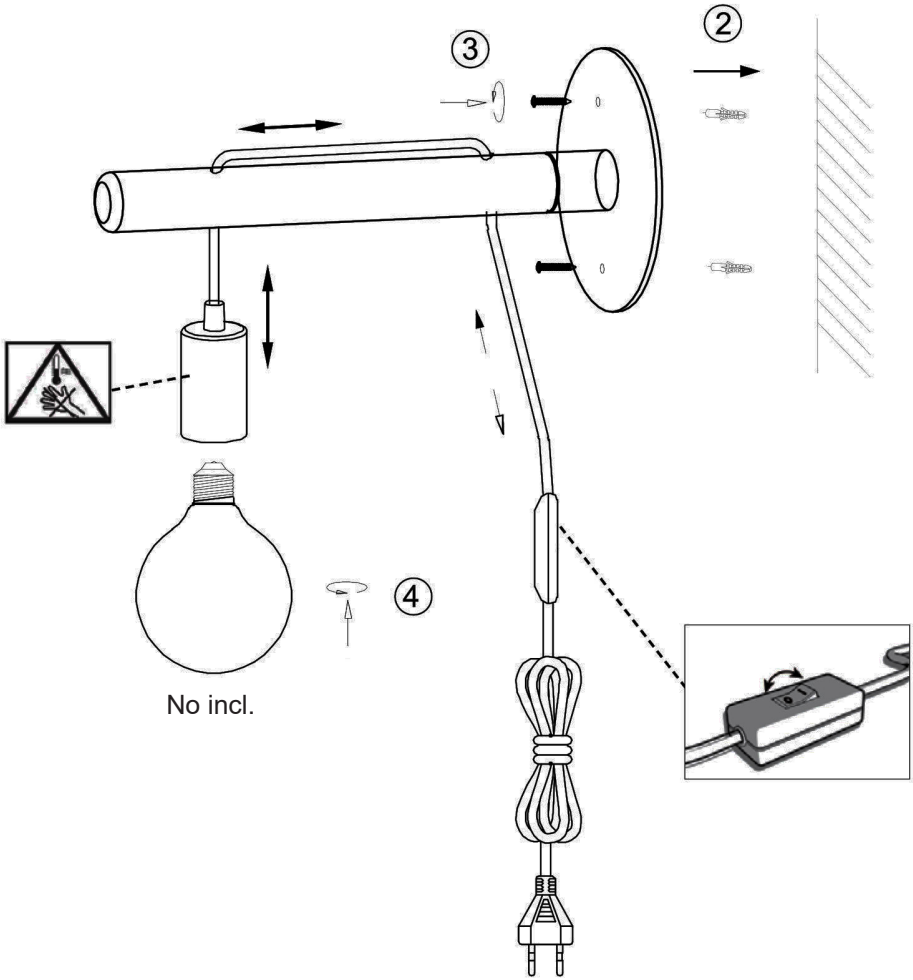
01.18