Brilliant
THE JEWEL IN LIGHTING

Philo STA
G16358...
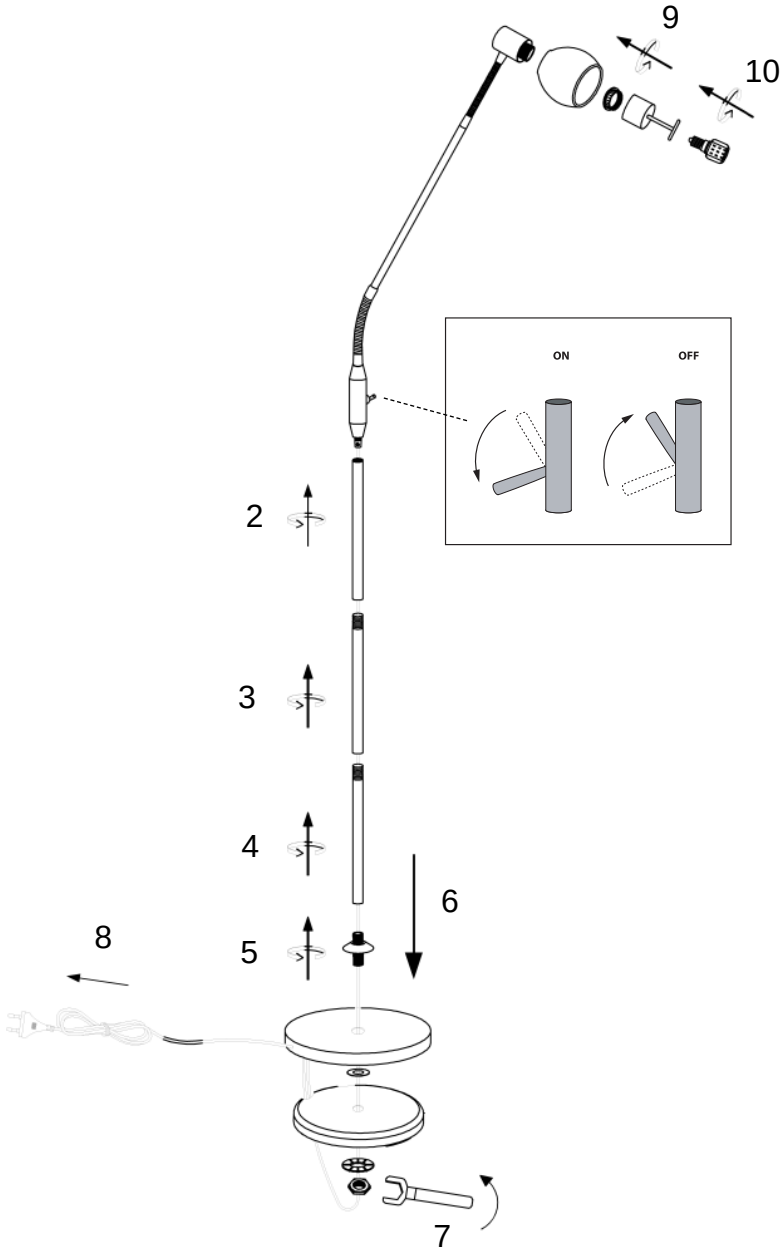
07.13