Brilliant
THE JEWEL IN LIGHTING

Kassandra
G34710...
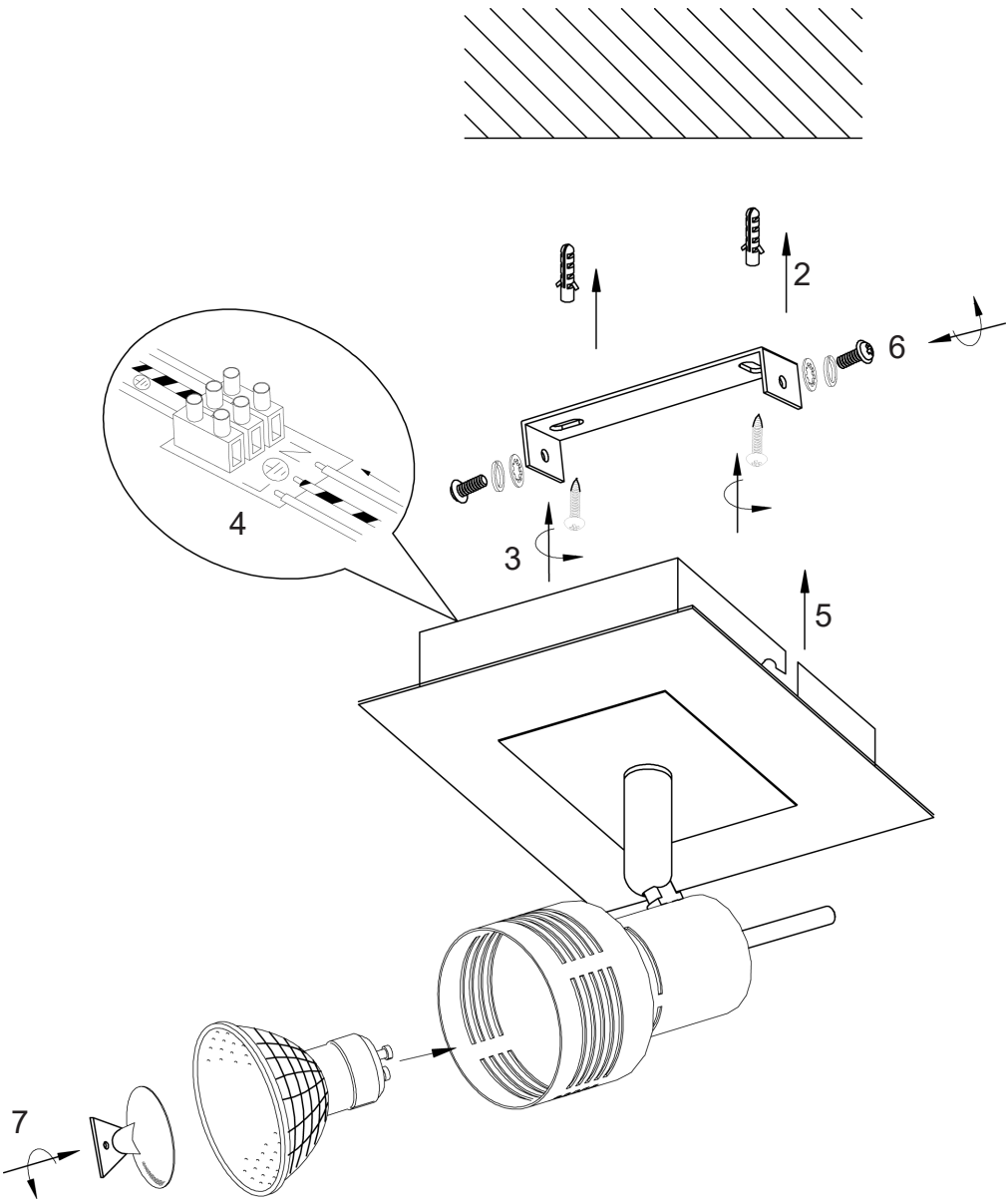
11.15